FU058–01

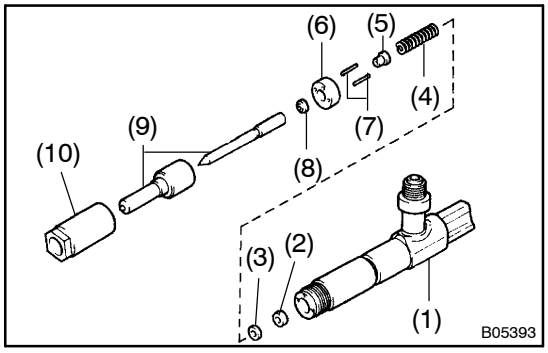

ADJUSTMENT

1. CHECK NO.2 OPENING PRESSURE

(a) Assemble these parts:
- (1) Nozzle holder body
- (2) No.1 pressure spring seat
- (3) No.1 pressure spring washer (Adjusting shim)
- (4) No.2 pressure spring
- (5) SST
- (6) Tip packing
- (7) Straight pins
- (8) No.3 pressure spring washer
- (9) Nozzle assembly
- (10) Retaining nut

SST 09268–17020

NOTICE:

Do not assemble the No.1 pressure spring, No.1 pressure pin and adjusting shim for adjustment of the No.1 opening pressure.

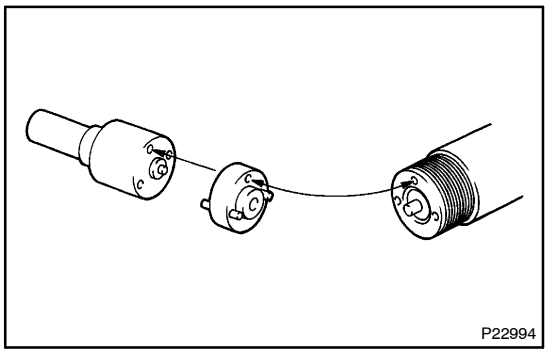

HINT:

Align the holes of the nozzle body, tip packing and nozzle holder body.

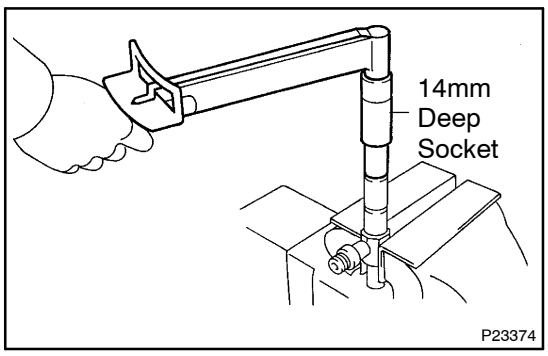

(b) Using a 14 mm deep socket wrench, torque the retaining nut.

Torque: 29.4 N·m (300 kgf·cm, 22 ft·lbf)

NOTICE:

Over torquing could cause the nozzle deformation and the needle adhesion or other defects.

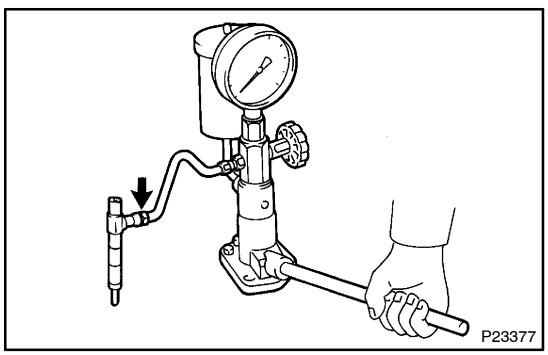

(c) Install the injection nozzle to the injection nozzle hand tester and bleed air from the union nut.

CAUTION:

Do not place your finger over the nozzle injection hole.

(d) Pump the tester handle a few times as fast as possible to discharge the carbon from the injection hole.

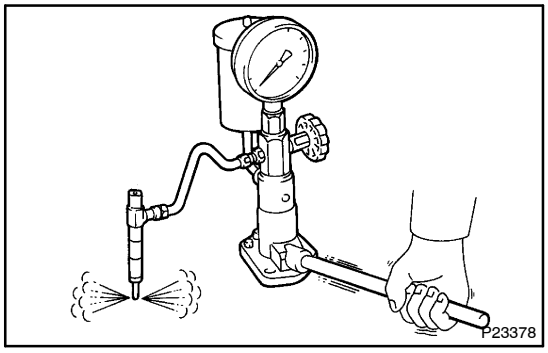

(e) Pump the tester handle slowly and observe the pressure gauge.

(f) Read the pressure gauge just as the injection pressure begins to drop.

No.2 opening pressure (Inspection pressure):
33,539 – 35,500 kPa
(342 – 362 kgf/cm^2, 4,864 – 5,149 psi)

HINT:

- Proper nozzle operation can be determined by a swishing sound.
- With the SST installation, the inspection adjusting valve of No.2 opening pressure has become higher than 27,459 kPa (280 kgf/cm^2, 3,982 psi).

If the opening pressure is not as specified, disassemble the nozzle and change the No.1 pressure spring washer (adjusting shim).

No.1 pressure spring washer (adjusting shim) thickness:

mm (in.)	mm (in.)	mm (in.)
0.700 (0.0276)	1.225 (0.0482)	1.625 (0.0640)
0.750 (0.0295)	1.250 (0.0492)	1.650 (0.0650)
0.800 (0.0315)	1.275 (0.0502)	1.675 (0.0659)
0.850 (0.0335)	1.300 (0.0512)	1.700 (0.0669)
0.900 (0.0354)	1.325 (0.0521)	1.725 (0.0679)
0.950 (0.0374)	1.350 (0.0531)	1.750 (0.0689)
0.975 (0.0384)	1.375 (0.0541)	1.775 (0.0699)
1.000 (0.0394)	1.400 (0.0551)	1.800 (0.0709)
1.025 (0.0404)	1.425 (0.0561)	1.850 (0.0728)
1.050 (0.0413)	1.450 (0.0571)	1.900 (0.0748)
1.075 (0.0423)	1.475 (0.0581)	1.950 (0.0768)
1.100 (0.0433)	1.500 (0.0591)	2.000 (0.0787)
1.125 (0.0443)	1.525 (0.0600)	2.050 (0.0807)
1.150 (0.0453)	1.550 (0.0610)	2.100 (0.0827)
1.175 (0.0463)	1.575 (0.0620)	2.150 (0.0846)
1.200 (0.0472)	1.600 (0.0630)	–

HINT:

- Varying the adjusting shim thickness by 0.025 mm (0.0010 in.) changes the injection pressure by about 373 kpa (3.8 kgf/cm^2, 54 psi).
- Only one adjusting shim should be used.

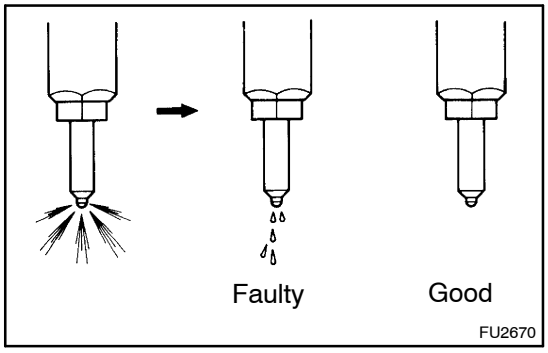

(g) There should be no dripping after injection.

(h) After checking the No.2 opening pressure, disassemble the nozzle.

2. ADJUST NO.1 OPENING PRESSURE

(a) Assemble the nozzle holder body, No.2 pressure spring washer (adjusting shim) for adjustment of No.1 opening pressure, No.1 pressure spring, pressure pin, No.1 pressure spring seat, No.1 pressure spring washer (adjusting shim) selected in step 1 above, No.2 pressure spring, No.2 pressure spring seat, tip packing, straight pins, No.3 pressure spring washer and nozzle assembly, and finger tighten the retaining nut.

HINT:

- Align the holes of the nozzle body, the distance piece and the nozzle holder body.
- When the thickness of the original used adjusting shim is not known, use a shim 1.5 mm (0.59 in.) thick instead.

(b) Read the pressure gauge just as the injection pressure begins to drop. (See steps (b) to (f) in step 1 above)

No.1 opening pressure:
17,162 – 18,142 kpa
(175 – 185 kgf/cm^2, 2,489 – 2,631 psi)

HINT:

Proper nozzle operation can be determined by a swishing sound.

If the opening pressure is not as specified, disassemble the nozzle and change the No.2 pressure spring washer (adjusting shim).

No.2 pressure spring washer (adjusting shim) thickness:

mm (in.)	mm (in.)	mm (in.)
0.800 (0.0315)	1.275 (0.0502)	1.750 (0.0689)
0.825 (0.0325)	1.300 (0.0512)	1.775 (0.0699)
0.850 (0.0335)	1.325 (0.0521)	1.800 (0.0709)
0.875 (0.0344)	1.350 (0.0531)	1.825 (0.0719)
0.900 (0.0354)	1.375 (0.0541)	1.850 (0.0728)
0.925 (0.0364)	1.400 (0.0551)	1.875 (0.0738)
0.950 (0.0374)	1.425 (0.0561)	1.900 (0.0748)
0.975 (0.0384)	1.450 (0.0571)	1.925 (0.0758)
1.000 (0.0394)	1.475 (0.0581)	1.950 (0.0768)
1.025 (0.0404)	1.500 (0.0591)	1.975 (0.0778)
1.050 (0.0413)	1.525 (0.0600)	2.000 (0.0787)
1.075 (0.0423)	1.550 (0.0610)	2.025 (0.0797)
1.100 (0.0433)	1.575 (0.0620)	2.050 (0.0807)
1.125 (0.0443)	1.600 (0.0630)	2.075 (0.0817)
1.150 (0.0453)	1.625 (0.0640)	2.100 (0.0827)
1.175 (0.0463)	1.650 (0.0650)	2.125 (0.0837)
1.200 (0.0472)	1.675 (0.0659)	2.150 (0.0846)
1.225 (0.0482)	1.700 (0.0669)	2.175 (0.0856)
1.250 (0.0492)	1.725 (0.0679)	2.200 (0.0866)

HINT:

- Varying the adjusting shim thickness by 0.025 mm (0.0010 in.) changes the injection pressure by about 373 kpa (3.8 kgf/cm^2, 54 psi).
- Only one adjusting shim should be used.

(c) There should be no dripping after injection.
(See step (g) in step 1 above)