FU059–01

REASSEMBLY

ASSEMBLY INJECTION NOZZLE HOLDER

(a) Assemble the nozzle holder body, No.2 pressure spring washer (adjusting shim), No.1 pressure spring, pressure pin, No.1 pressure spring seat, No.1 pressure spring washer (adjusting shim), No.2 pressure spring, No.2 pressure spring seat, tip packing, straight pins, No.3 pressure spring washer and nozzle assembly, and finger tighten the retaining nut.

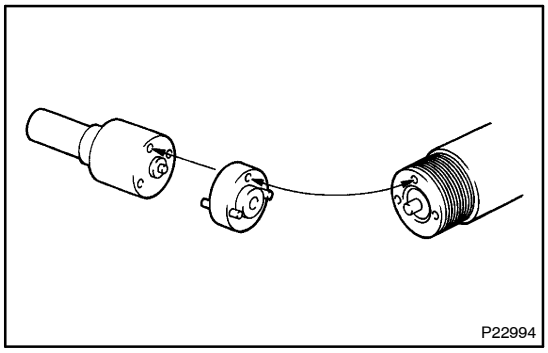
P22994

HINT:

- Align the holes of the nozzle body, the distance piece and the nozzle holder body.
- When the thickness of the original used adjusting shim is not known, use a shim 1.5 mm (0.59 in.) thick instead.

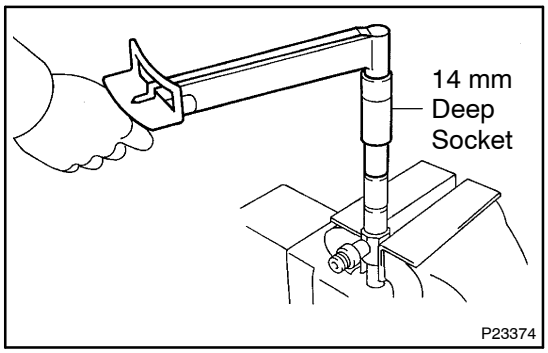

P23374

(b) Using a 14 mm deep socket wrench, torque the retaining nut.

Torque: 29.4 N·m (300 kgf·cm, 22 ft·lbf)

NOTICE:

Over torquing could cause the nozzle deformation and the needle adhesion or other defects.