INJECTION PUMP (1HZ, 1HD–T)

COMPONENTS

FU05A–01

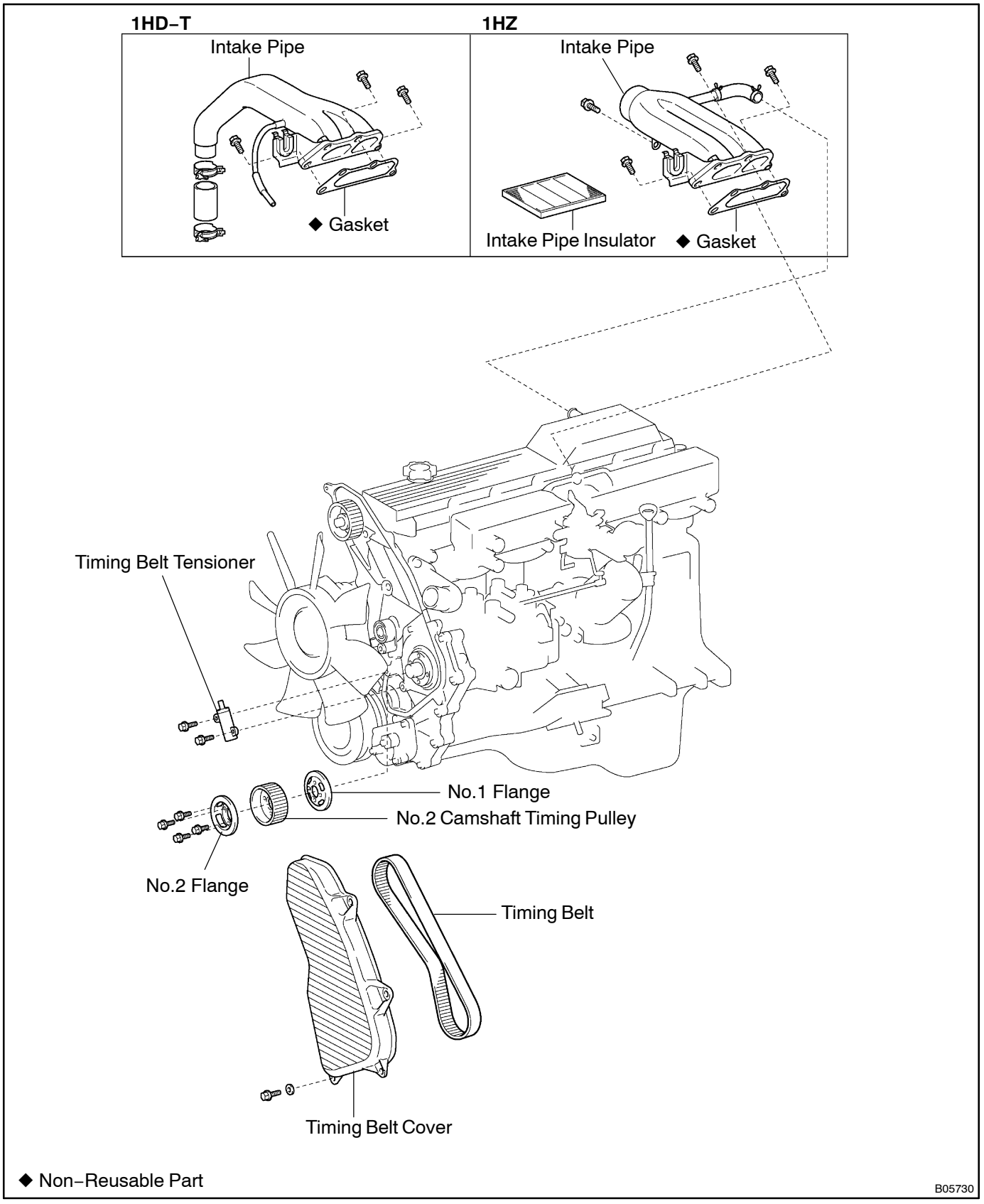

B05730

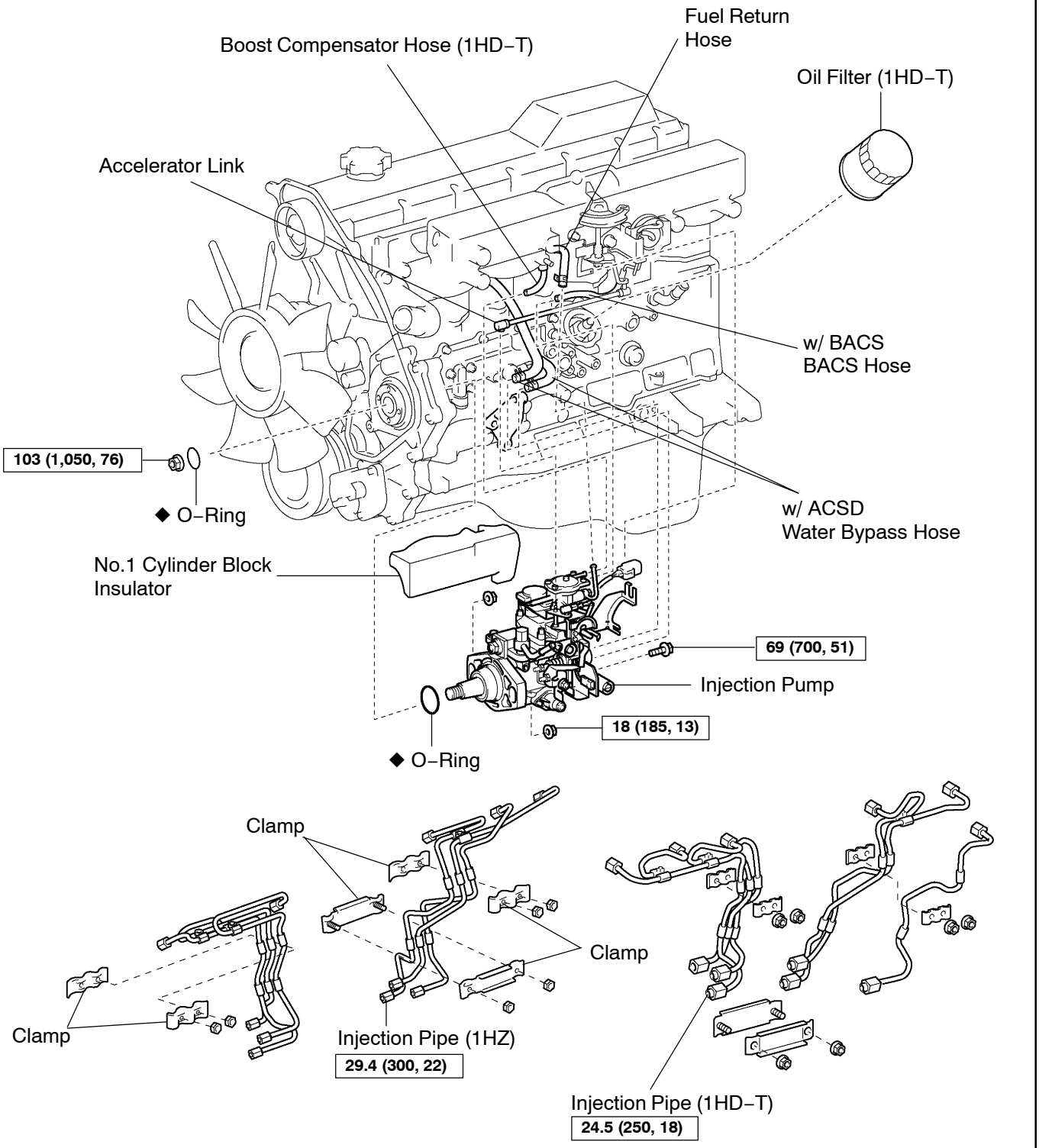

N·m (kgf·cm, ft·lbf): Specified torque
◆ Non–Reusable Part

B05731

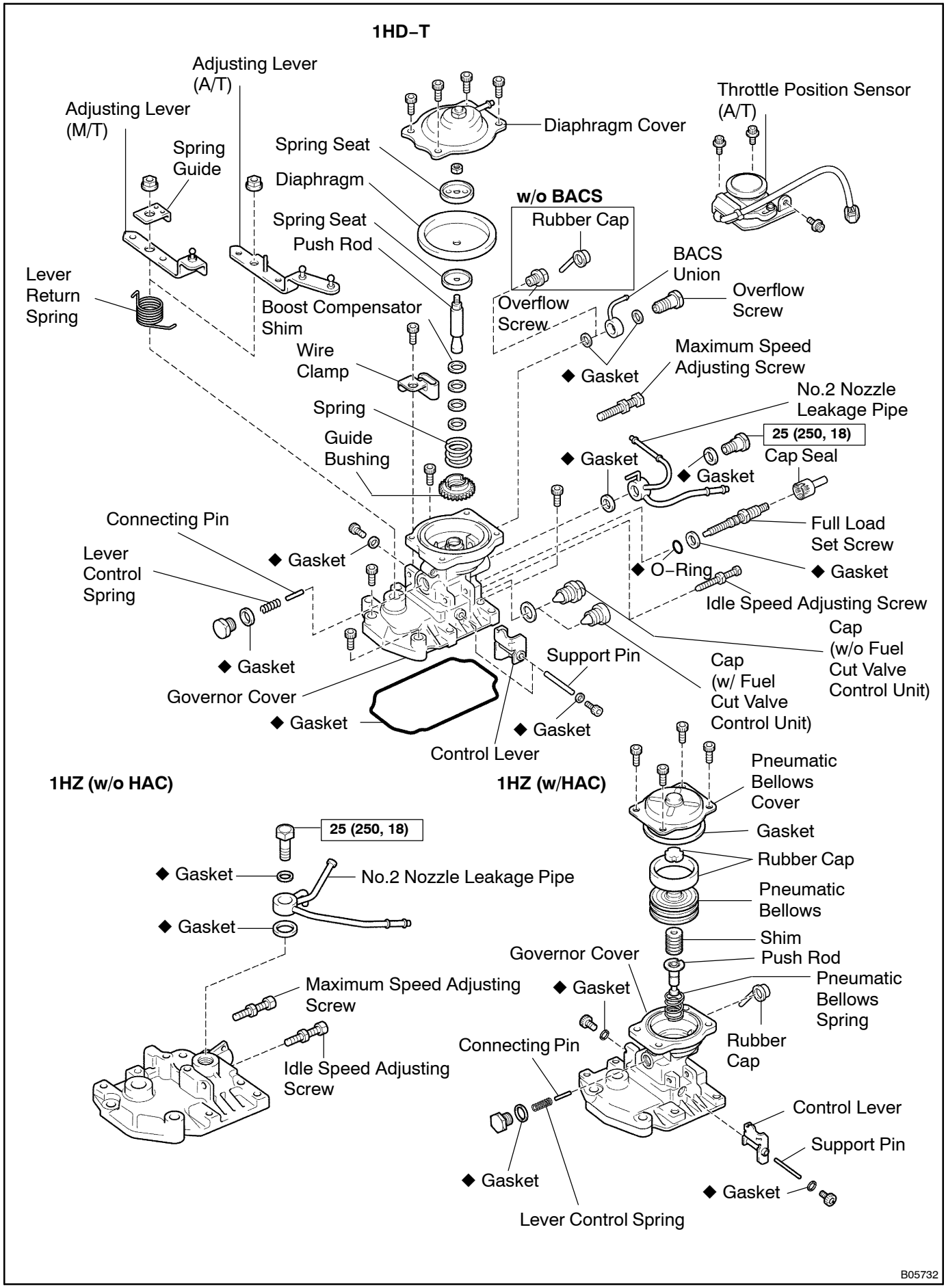
1HD–T
Adjusting Lever (A/T)
Adjusting Lever (M/T)
Spring Guide
Spring Seat
Diaphragm
Spring Seat
Push Rod
Diaphragm Cover
Throttle Position Sensor (A/T)
w/o BACS
Rubber Cap
BACS Union
Overflow Screw
Overflow Screw
Lever Return Spring
Boost Compensator Shim
Wire Clamp
Spring
Guide Bushing
◆ Gasket
Maximum Speed Adjusting Screw
No.2 Nozzle Leakage Pipe
25 (250, 18)
Cap Seal
◆ Gasket
◆ Gasket
Connecting Pin
Lever Control Spring
◆ Gasket
◆ O–Ring
◆ Gasket
Full Load Set Screw
Idle Speed Adjusting Screw
Cap (w/o Fuel Cut Valve Control Unit)
◆ Gasket
Governor Cover
◆ Gasket
Support Pin
◆ Gasket
Cap (w/ Fuel Cut Valve Control Unit)
Control Lever
1HZ (w/o HAC)
25 (250, 18)
◆ Gasket
No.2 Nozzle Leakage Pipe
◆ Gasket
Maximum Speed Adjusting Screw
Idle Speed Adjusting Screw
1HZ (w/HAC)
Pneumatic Bellows Cover
Gasket
Rubber Cap
Pneumatic Bellows
Shim
Push Rod
Governor Cover
◆ Gasket
Pneumatic Bellows Spring
Rubber Cap
Connecting Pin
Control Lever
Support Pin
◆ Gasket
◆ Gasket
Lever Control Spring
B05732

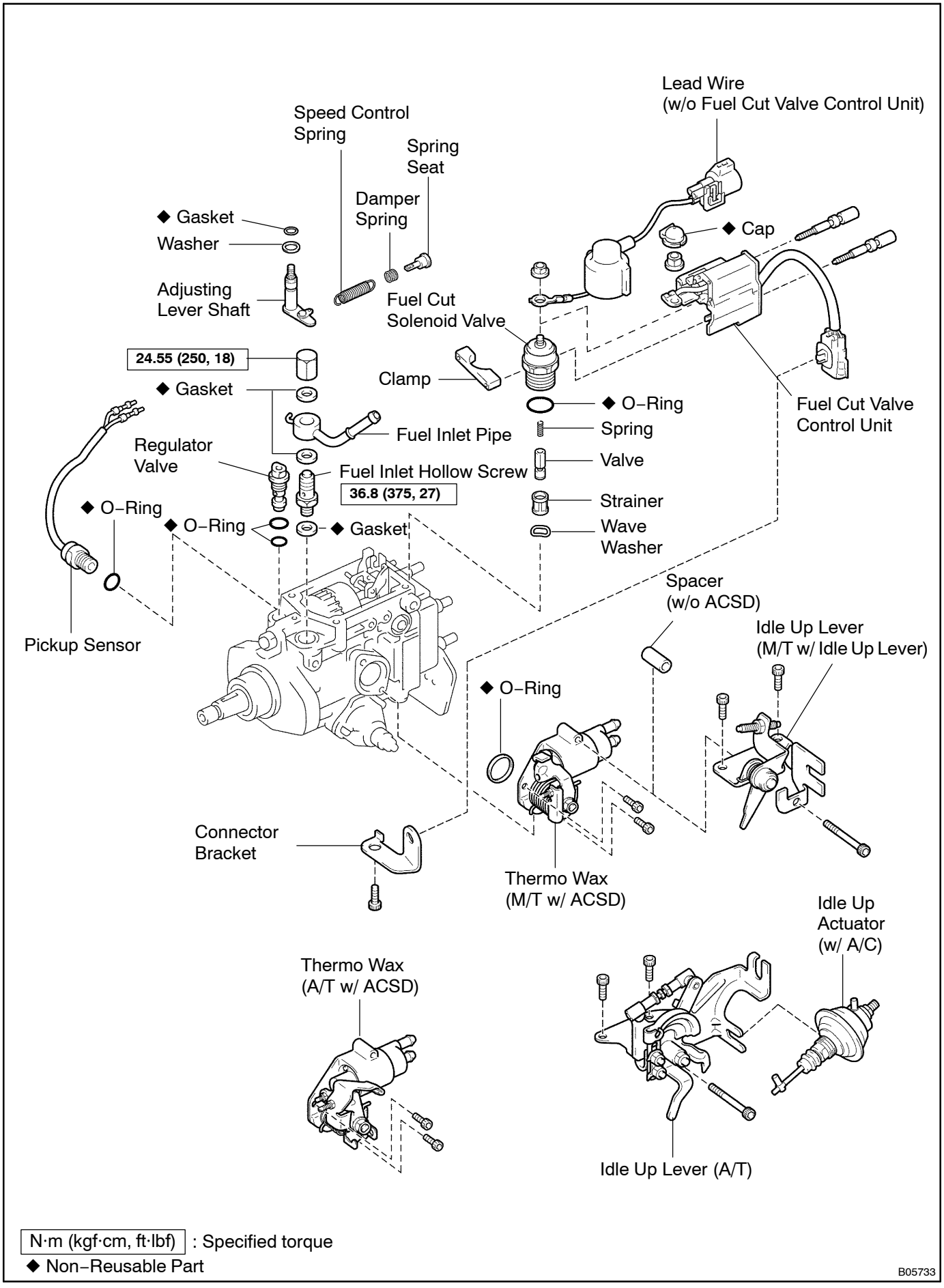
Lead Wire
(w/o Fuel Cut Valve Control Unit)
Speed Control
Spring
Spring
Seat
Damper
Spring
◆ Gasket
Washer
Adjusting
Lever Shaft
◆ Cap
Fuel Cut
Solenoid Valve
24.55 (250, 18)
◆ Gasket
Clamp
◆ O–Ring
Spring
Valve
Strainer
Wave
Washer
Fuel Cut Valve
Control Unit
Fuel Inlet Pipe
Regulator
Valve
Fuel Inlet Hollow Screw
36.8 (375, 27)
◆ O–Ring
◆ O–Ring
◆ Gasket
Pickup Sensor
Spacer
(w/o ACSD)
Idle Up Lever
(M/T w/ Idle Up Lever)
◆ O–Ring
Connector
Bracket
Thermo Wax
(M/T w/ ACSD)
Idle Up
Actuator
(w/ A/C)
Thermo Wax
(A/T w/ ACSD)
Idle Up Lever (A/T)
N·m (kgf·cm, ft·lbf) : Specified torque
◆ Non–Reusable Part
B05733

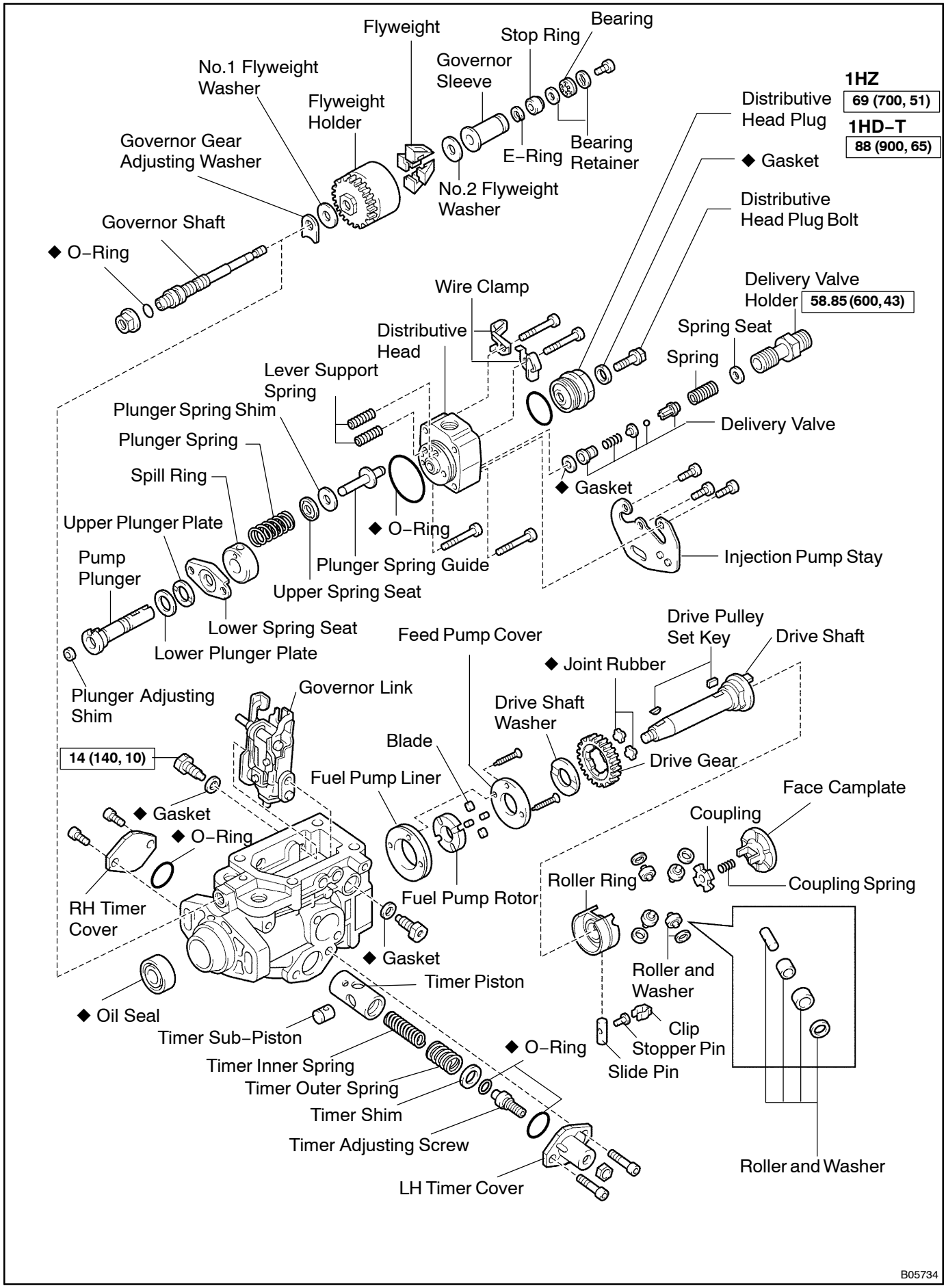
Flyweight
Stop Ring
Bearing
Governor Sleeve
No.1 Flyweight Washer
Flyweight Holder
Governor Gear Adjusting Washer
E–Ring
Bearing Retainer
No.2 Flyweight Washer
Governor Shaft
◆ O–Ring
1HZ
69 (700, 51)
1HD–T
88 (900, 65)
Distributive Head Plug
◆ Gasket
Distributive Head Plug Bolt
Wire Clamp
Delivery Valve Holder
58.85 (600, 43)
Distributive Head
Spring Seat
Spring
Lever Support Spring
Plunger Spring Shim
Plunger Spring
Delivery Valve
Spill Ring
◆ Gasket
Upper Plunger Plate
◆ O–Ring
Injection Pump Stay
Pump Plunger
Plunger Spring Guide
Upper Spring Seat
Lower Spring Seat
Lower Plunger Plate
Feed Pump Cover
Drive Pulley Set Key
Drive Shaft
◆ Joint Rubber
Plunger Adjusting Shim
Governor Link
Drive Shaft Washer
Blade
14 (140, 10)
Drive Gear
Fuel Pump Liner
Face Camplate
Coupling
◆ Gasket
◆ O–Ring
Roller Ring
Coupling Spring
RH Timer Cover
Fuel Pump Rotor
◆ Gasket
Roller and Washer
Timer Piston
◆ Oil Seal
Clip
Timer Sub–Piston
Stopper Pin
◆ O–Ring
Timer Inner Spring
Slide Pin
Timer Outer Spring
Timer Shim
Timer Adjusting Screw
Roller and Washer
LH Timer Cover
B05734