FU05C–01

DISASSEMBLY

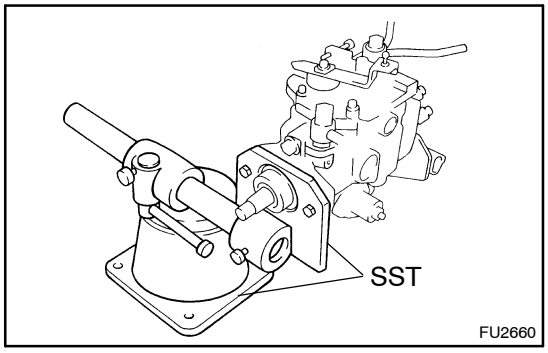

1. MOUNT PUMP ASSEMBLY TO SST (STAND)
SST 09241–76022, 09245–54010

2. REMOVE SET KEY OF DRIVE PULLEY FROM DRIVE SHAFT

3. w/ A/C:
REMOVE IDLE–UP ACTUATOR

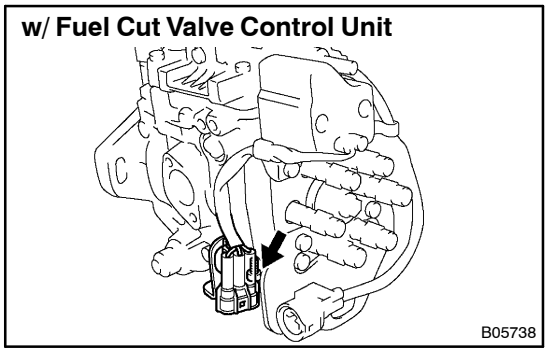

4. w/ Fuel Cut Valve Control Unit:
REMOVE FUEL CUT VALVE CONTROL UNIT

(a) Disconnect the connector and wire.

(b) Using a 8 mm hexagon wrench, remove the bolt and connector bracket.

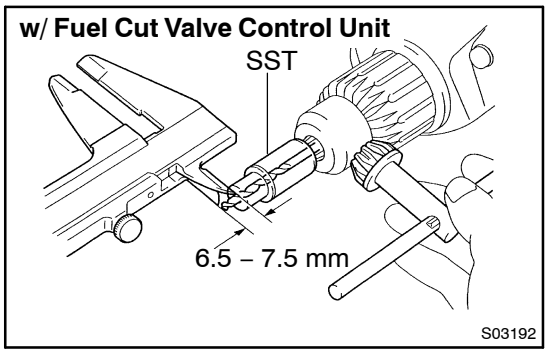

(c) Attach a drill (diameter: 3.2 mm) and SST to a drill motor.
SST 09263–00010

(d) Protrude the drill tip 6.5 – 7.5 mm (0.256 – 0.295 in.) from the SST, and set it.

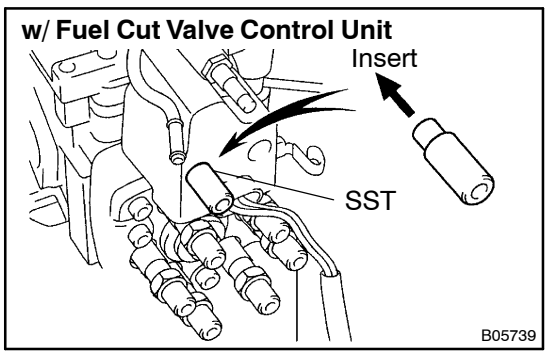

(e) Attach the SST to the bolt hole of the fuel cut valve control unit as shown in the illustration.

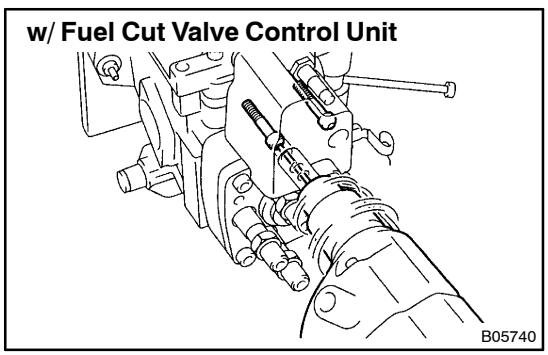

(f) Drill the heads of the 2 bolts.

NOTICE:

- **Advance the drill bit slowly, making sure to drill a hole straight.**
- **In addition to place a cap over the delivery valve holder, cover the area with a cloth to prevent the cutting chip from coming in contact with the delivery valve holder.**

(g) Remove the SST from the bolt hole.

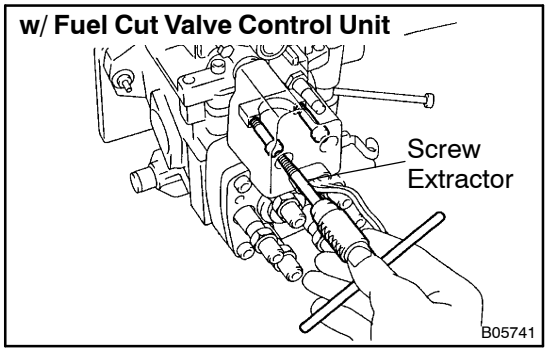

(h) Using a screw extractor, remove the 2 bolts.
(i) Disconnect the fuel cut valve control unit from the fuel cut solenoid.

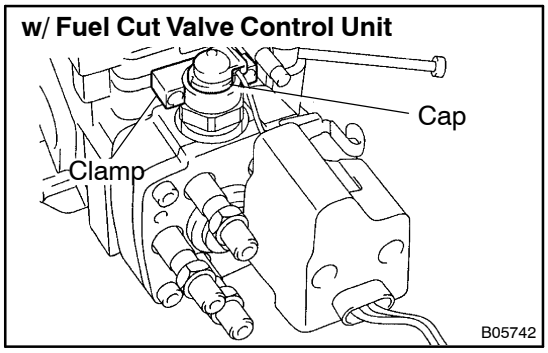

(j) Remove the cap and clamp.

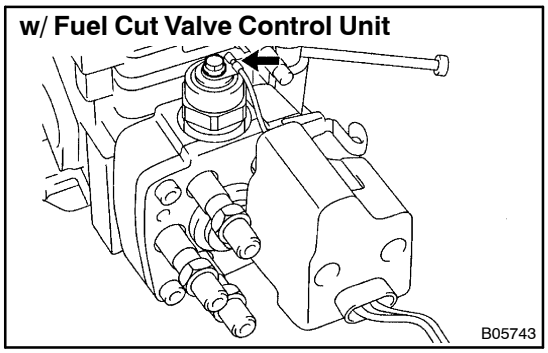

(k) Remove the nut, and disconnect the lead wire from the fuel cut solenoid terminal. Remove the fuel cut valve control unit.
(l) Clean the cutting tip from the bolt holes of the fuel cut valve control unit.

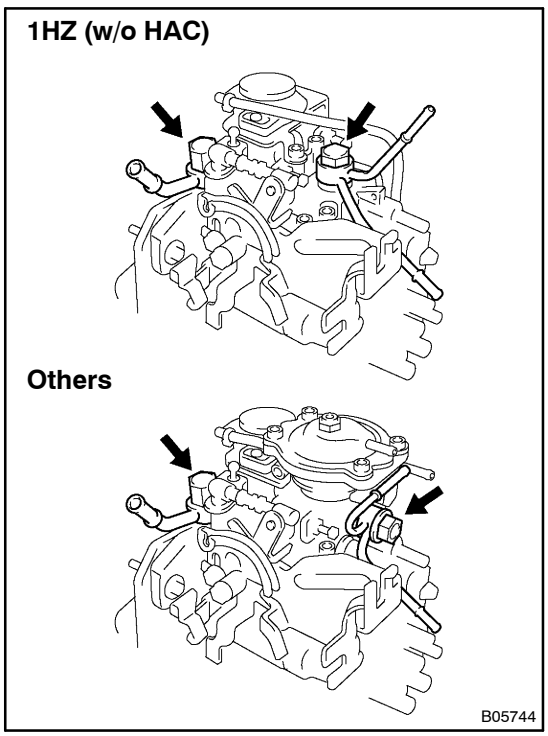

5. REMOVE FUEL PIPES

(a) Remove the cap nut, fuel inlet pipe and 2 gaskets.
(b) Remove the union bolts, No.2 nozzle leakage pipe and 2 gaskets.

A/T and M/T (w/ Idle UP Lever)

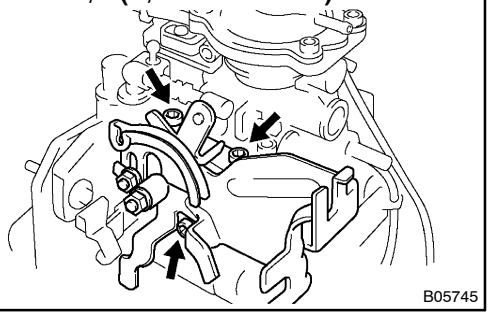

B05745

6. A/T and M/T (w/ Idle Up Lever):
REMOVE IDLE–UP LEVER

(a) A/T:
Remove the idle–up lever link from the adjusting lever.

(b) Using a 5 mm hexagon wrench, remove the 3 bolts, idle–up lever and spacer (w/o ACSD).

w/ ACSD

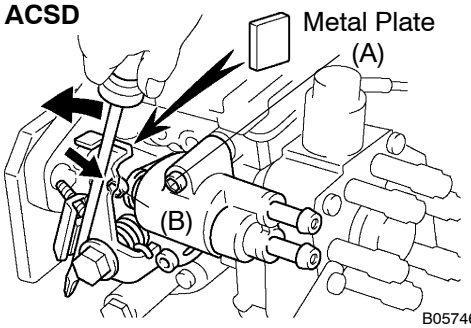

B05746

7. w/ ACSD:
REMOVE THERMO WAX

(a) Using a 5 mm hexagon wrench, temporality install the bolt (A).

(b) Using a screwdriver, turn the cold starting lever counter-clockwise.

(c) Using a 5 mm hexagon wrench, remove the bolt (B).

(d) Put a metal plate (thickness of 3.5 – 7.5 mm (0.138 – 0.295 in.)) between the cold starting lever and thermo wax plunger.

(e) Using a 5 mm hexagon wrench, remove the 2 bolts, thermo wax and O–ring.

w/ ACSD

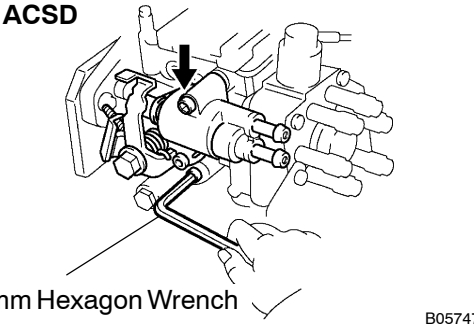

B05747

A/T

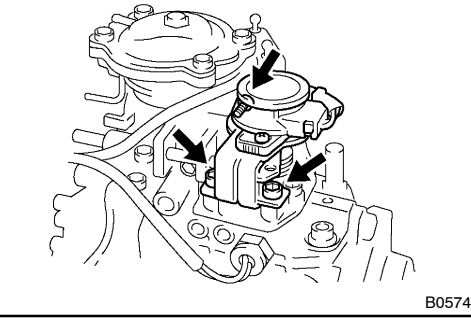

B05748

8. A/T:
REMOVE THROTTLE POSITION SENSOR AND BRACKET ASSEMBLY

Using a 5 mm hexagon wrench, remove the 3 bolts, the throttle position sensor and bracket assembly.

1HD–T (w/o Fuel Cut Valve Control Unit)

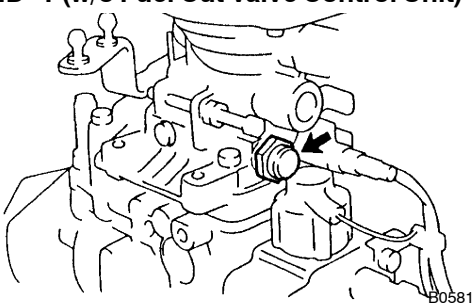

B05816

9. 1HD–T:
REMOVE CAP

(a) w/o Fuel cut valve control unit:
Remove the cap and gasket.

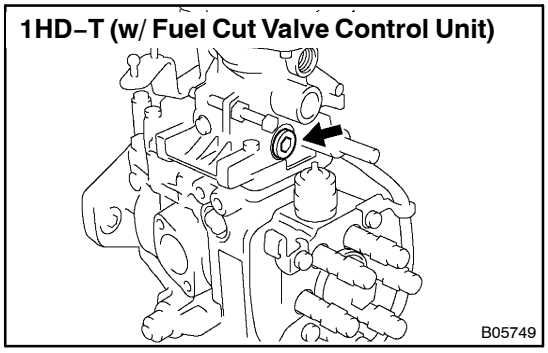

(b) w/ Fuel cut valve control unit:
Using a 6 mm hexagon wrench, remove the cap and gasket.

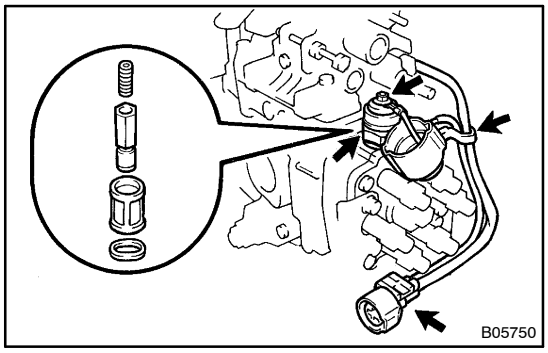

10. REMOVE FUEL CUT SOLENOID

(a) w/o Fuel Cut Valve Control Unit:
Disconnect the lead wire connector from the bracket.

(b) w/o Fuel Cut Valve Control Unit:
Disconnect the wire harness from the wire clamp.

(c) w/o Fuel Cut Valve Control Unit:
Disconnect the dust cover from the fuel cut solenoid.

(d) w/o Fuel Cut Valve Control Unit:
Remove the nut, lead wire and dust cover.

(e) Remove the fuel cut solenoid, O–ring, spring, valve, strainer and wave washer.

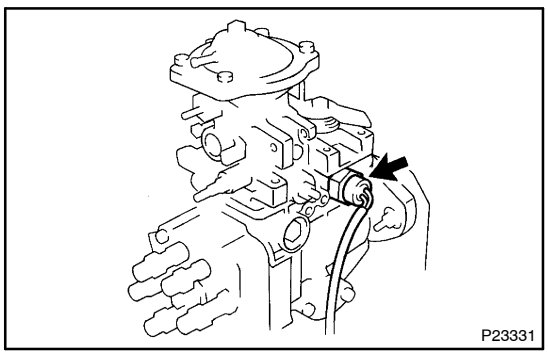

11. REMOVE PICKUP SENSOR

(a) Remove the pickup sensor and O–ring.

(b) Disconnect the sensor lead wires from the connector.

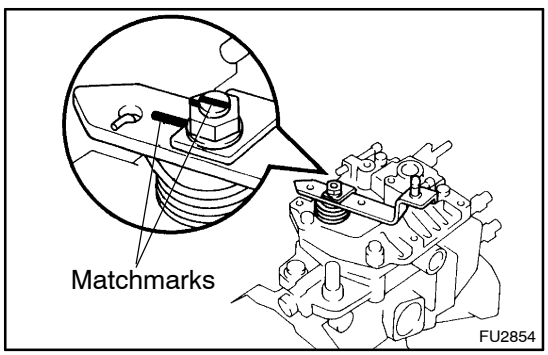

12. REMOVE ADJUSTING LEVER

(a) Place the matchmarks on adjusting lever and shaft.

(b) Remove the nut, return spring guide (M/T), adjusting lever and return spring.

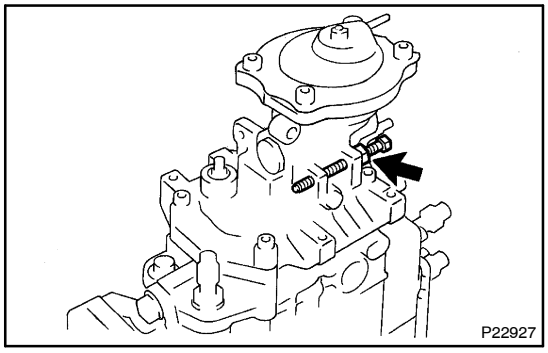

13. REMOVE GOVERNOR COVER

(a) Remove the idle speed adjusting screw.

(b) Using a 5 mm hexagon wrench, remove the bolt and wire clamp from the governor cover.

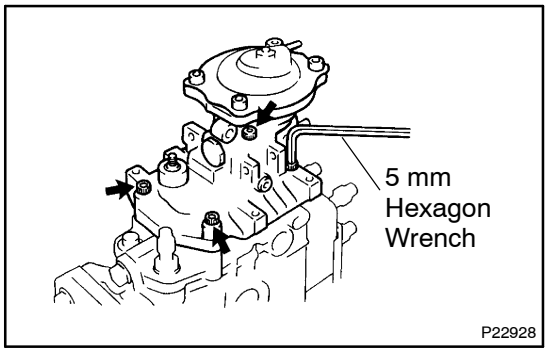

(c) Using a 5 mm hexagon wrench, remove the 4 bolts.

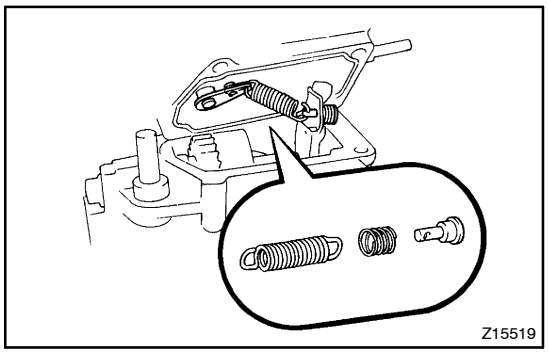

(d) Disconnect the speed control spring from the spring seat, and remove the spring seat, damper spring, speed control spring, the governor cover, adjusting lever shaft assembly and gasket.

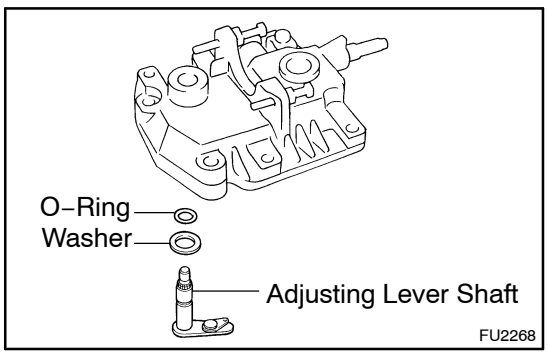

14. REMOVE GOVERNOR ADJUSTING LEVER SHAFT FROM GOVERNOR COVER

(a) Remove the adjusting lever shaft assembly from the governor cover.

(b) Remove the O–ring and washer from the adjusting lever shaft.

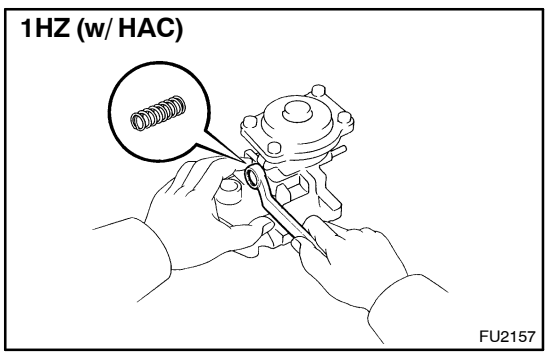

15. 1HZ (w/ HAC): DISASSEMBLE HIGH ALTITUDE COMPENSATOR

(a) Remove the lever control spring.
Remove the bolt, gasket and lever control spring.

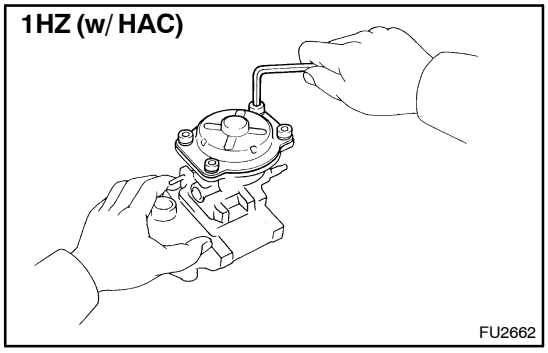

(b) Remove the pneumatic bellows.

(1) Using a 5 mm hexagon wrench, remove the four bolts.

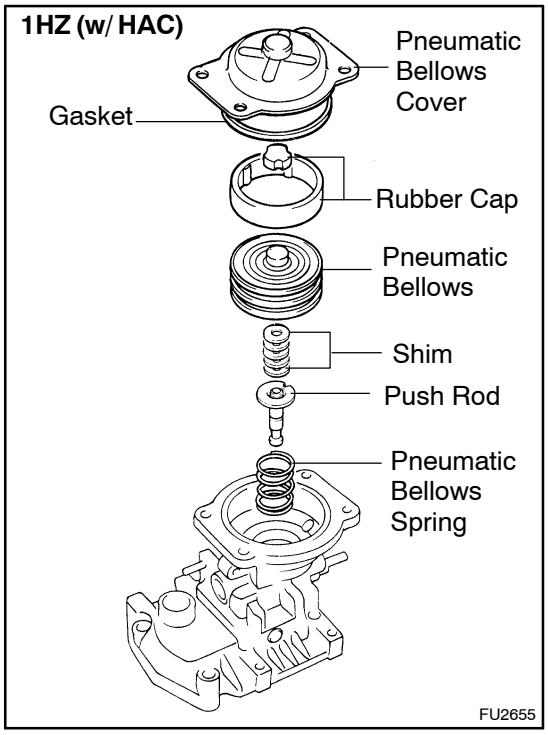

(2) Remove the pneumatic bellows cover, gasket, shims, pneumatic bellows, 2 rubber caps, push rod and pneumatic bellows spring.

NOTICE:
Note the number of the shims.

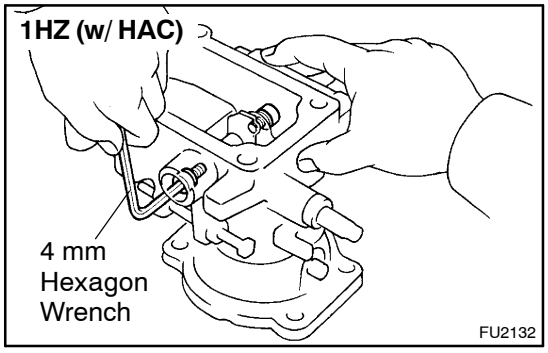

(c) Remove the control lever.

(1) Using a 4 mm hexagon wrench, remove the 2 bolts and 2 gaskets.

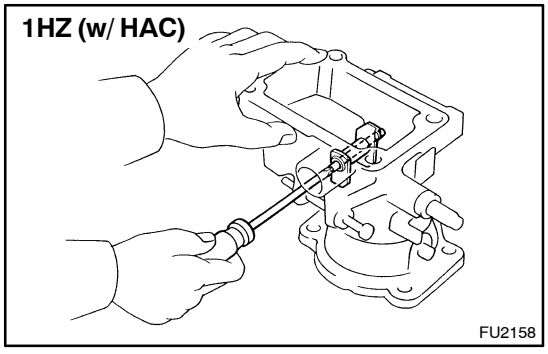

(2) Using a small screwdriver, push out the support pin and remove the control lever.

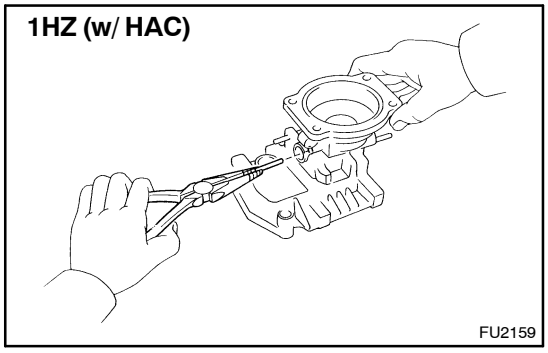

(3) Using needle nose pliers, remove the connecting pin.

NOTICE:
Be careful not to damage the connecting. Tape the tip of the pliers.

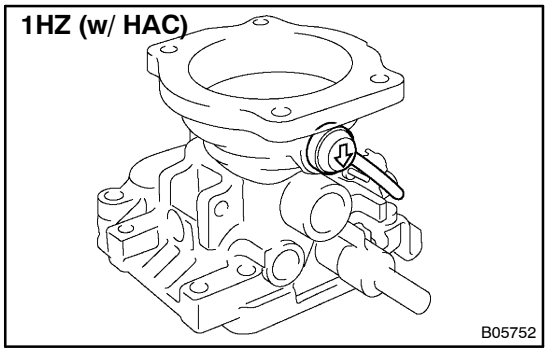

(d) Remove the rubber cap from the governor cover.

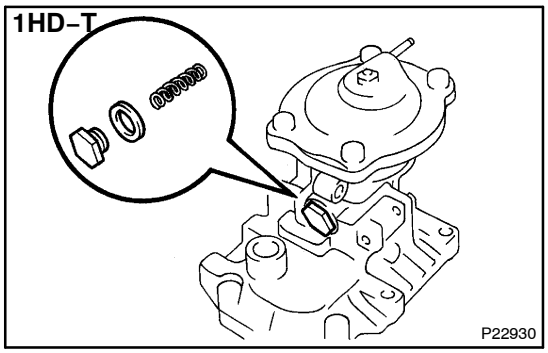

16. 1HD–T:
DISASSEMBLE BOOST COMPENSATOR

(a) Remove the lever control spring.
Remove the bolt, gasket and lever control spring.

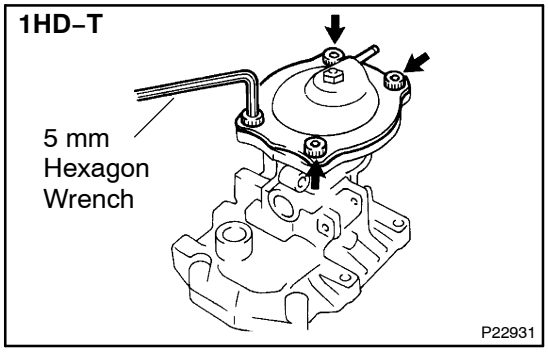

(b) Remove the boost compensator diaphragm.
(1) Using a 5 mm hexagon wrench, remove the 4 bolts.

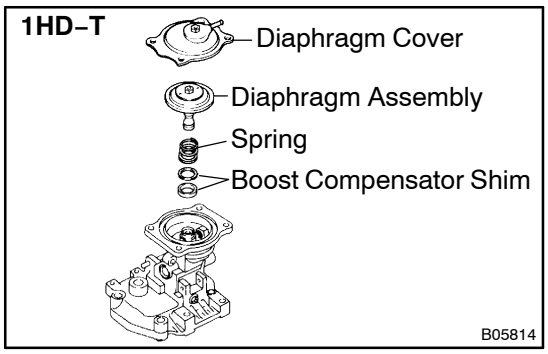

(2) Remove the diaphragm cover, diaphragm assembly, spring and boost compensator shims.

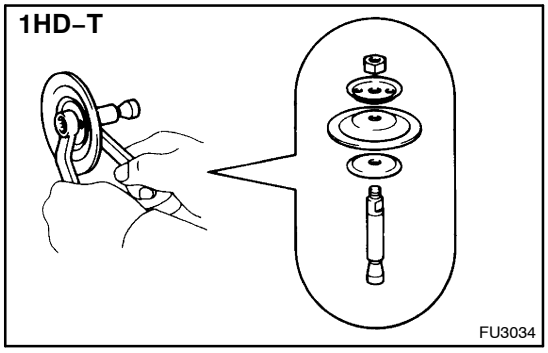

(3) Remove the nut, 2 spring seats, diaphragm from the push rod.

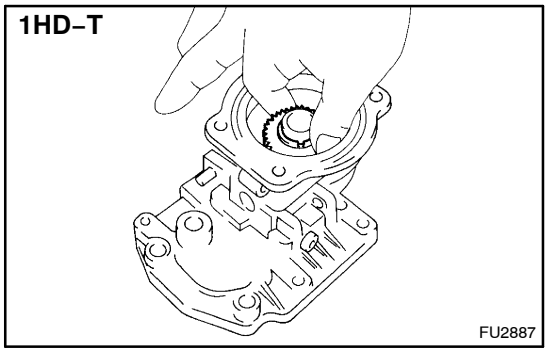

(c) Remove the guide bushing.

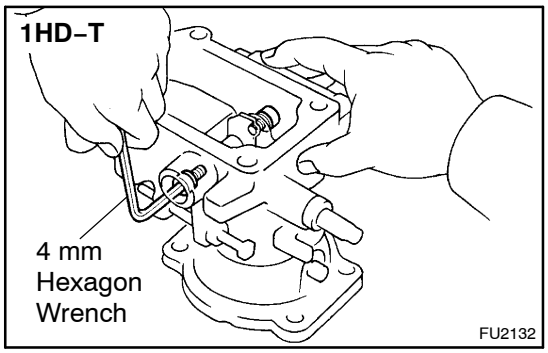

(d) Remove the control lever.

(1) Using a 4 mm hexagon wrench, remove the 2 bolts and 2 gaskets.

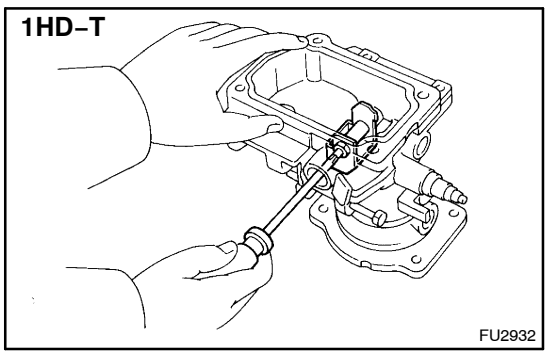

(2) Using a small screwdriver, push out the support pin and remove the control lever.

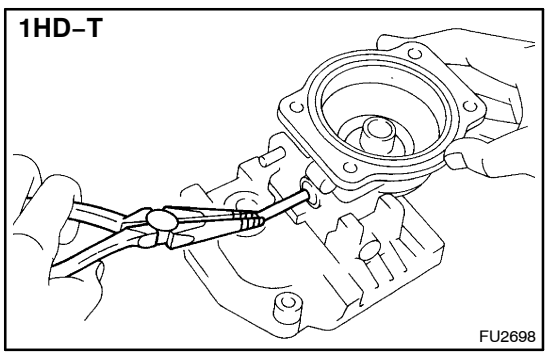

(3) Using needle nose pliers, remove the connecting pin.

NOTICE:
Be careful not to damage the connecting pin. Tape the tip of the pliers.

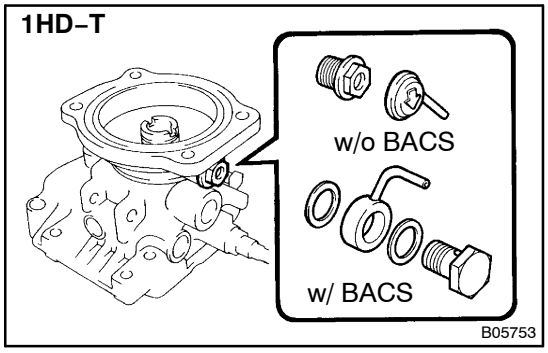

(e) Remove overflow screw
(1) w/o BACS:
Remove the rubber cap and overflow screw.
(2) w/ BACS:
Remove the overflow screw, BACS union and 2 gaskets.

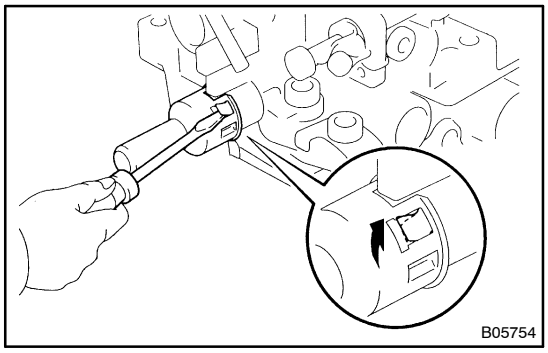

17. REMOVE FULL LOAD SET SCREW
(a) Using a small screwdriver, pry the claws.
(b) Remove the cap seal.
(c) Remove the full load set screw.
18. CHECK FLYWEIGHT HOLDER THRUST CLEARANCE (See page FU–92)
Thrust clearance: 0.15 – 0.35 mm (0.0059 – 0.0138 in.)

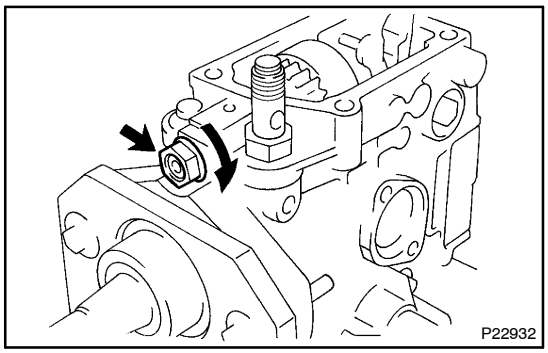

19. REMOVE GOVERNOR SHAFT AND FLYWEIGHT HOLDER
(a) Remove the governor shaft lock nut by turning it clockwise.
NOTICE:
The governor shaft and lock nut have LH threads.

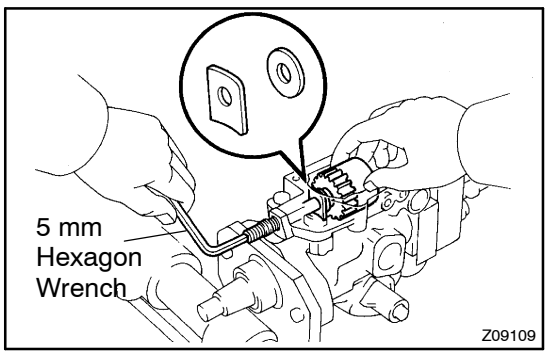

(b) Using a 5 mm hexagon wrench, remove the governor shaft O–ring clockwise and remove the flyweight holder assembly, No.1 flyweight washer and governor gear adjusting washer.
HINT:
Be careful not to drop the 2 washers into the pump housing.

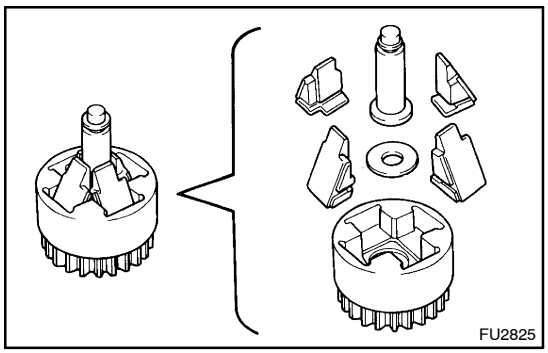

(c) Remove the governor sleeve, No.2 flyweight washer and 4 flyweights from the flyweight holder.

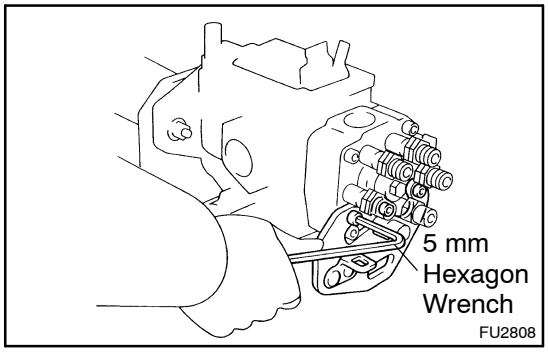

20. REMOVE INJECTION PUMP STAY

Using a 5 mm hexagon wrench, remove the 3 bolts and injection pump stay.

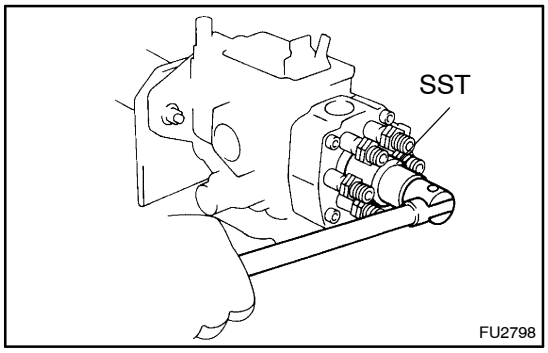

21. REMOVE DISTRIBUTIVE HEAD PLUG

Using SST, remove the distributive head plug and O–ring.

SST 09260–54012 (09262–54010)

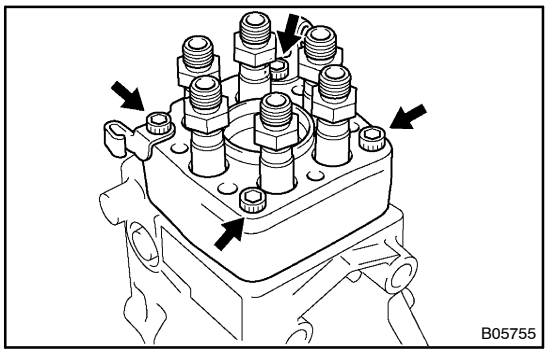

22. REMOVE DISTRIBUTIVE HEAD

(a) Using a 5 mm hexagon wrench, remove the 4 bolts and 2 wire clamps.

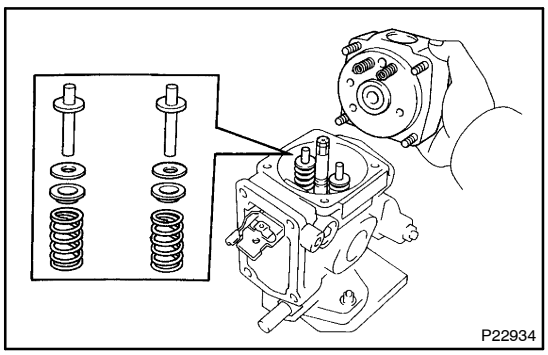

(b) Remove the distributive head, 2 lever support springs, 2 plunger spring guides, 2 plunger spring shims, 2 upper spring seats and 2 plunger springs.

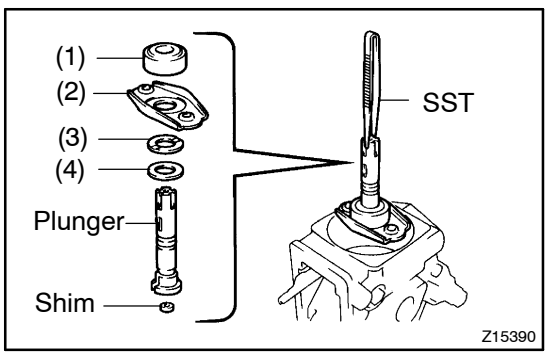

23. REMOVE PUMP PLUNGER

Using SST, remove the pump plunger and plunger adjusting shim together with the spill ring, lower spring seat, upper plunger plate and lower plunger plate.

SST 09260–54012 (09269–54030)

NOTICE:

Do not touch the sliding surfaces of the pump plunger with your hand.

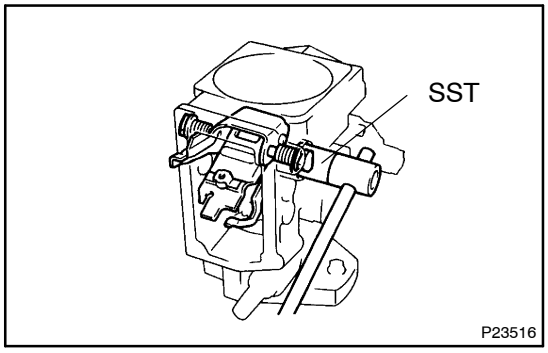

24. REMOVE GOVERNOR LINK

Using SST, remove the 2 support bolts, gaskets and governor link.

SST 09260–54012 (09269–54040)

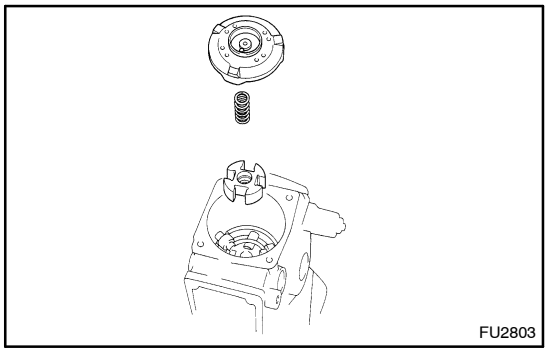

25. REMOVE FACE CAMPLATE AND COUPLING

Remove the face camplate, coupling spring and coupling.

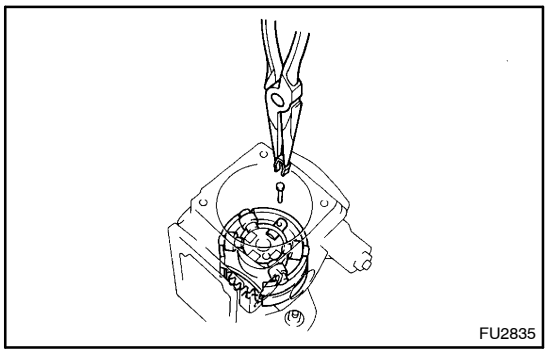

26. REMOVE ROLLER RING AND DRIVE SHAFT

(a) Remove the timer clip and stopper pin.

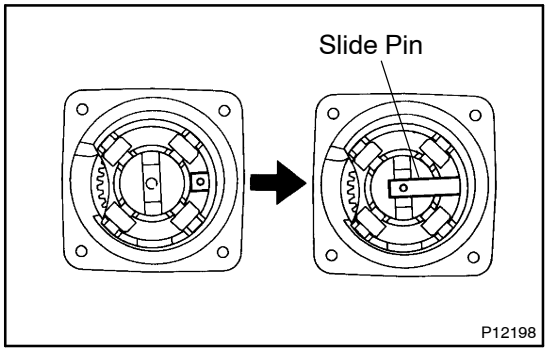

(b) Push the slide pin toward inside.

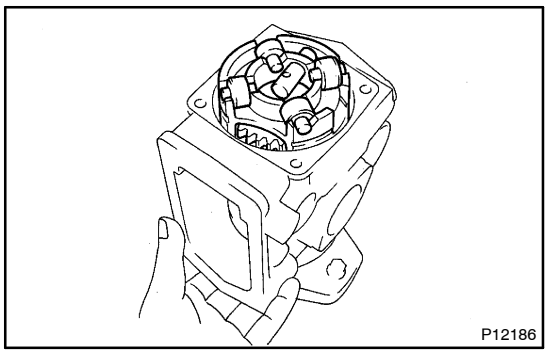

(c) Push the drive shaft, and remove the roller ring, 4 rollers and shims assembly.

NOTICE:

- **Be careful not to drop the rollers.**
- **Do not alter the position or assembly of the rollers.**

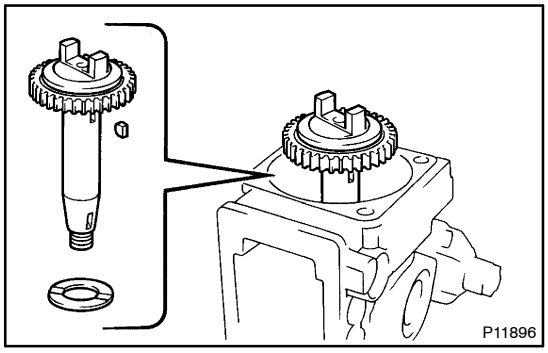

(d) Remove the drive shaft, governor drive gear, 2 joint rubbers assembly, set key and drive shaft washer.

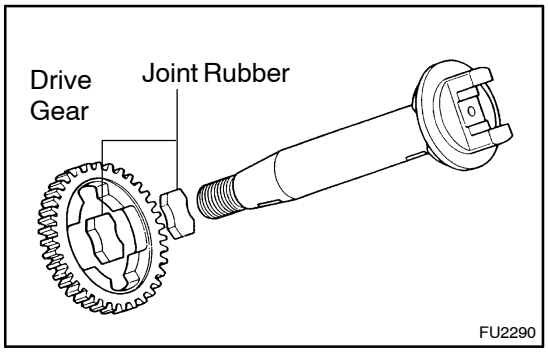

(e) Remove the drive gear and 2 joint rubbers from the drive shaft assembly.

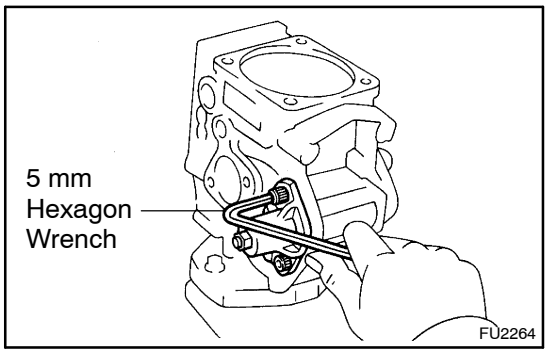

27. REMOVE TIMER

(a) Using a 5 mm hexagon wrench, remove the 4 bolts.

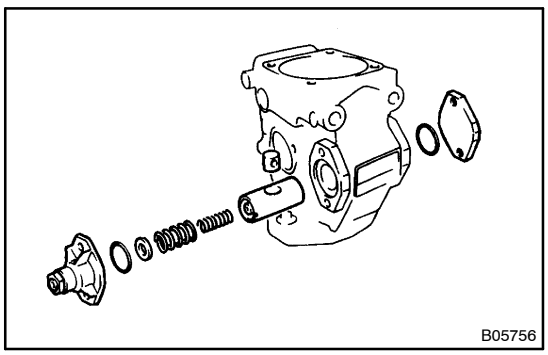

(b) Remove the LH timer cover, timer adjusting screw and nut assembly, O–ring, shim, outer spring, inner spring, RH timer cover, O–ring, piston and sub–piston.

(c) Remove the nut from the LH timer cover.

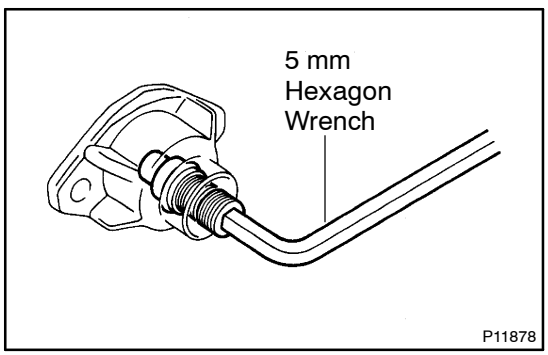

(d) Using a 5 mm hexagon wrench, remove the timer adjusting screw.

(e) Remove the O–ring from the timer adjusting ring.

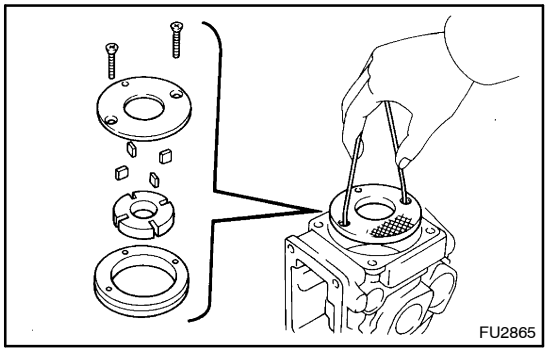

28. REMOVE FUEL FEED PUMP

(a) Remove the 2 screws.

(b) Using a piece of wire, remove the feed pump cover.

(c) Remove the feed pump rotor, 4 blades and liner.

NOTICE:

- **Be careful not to interchange the blade positions.**
- **Be careful not to damage the pump body.**

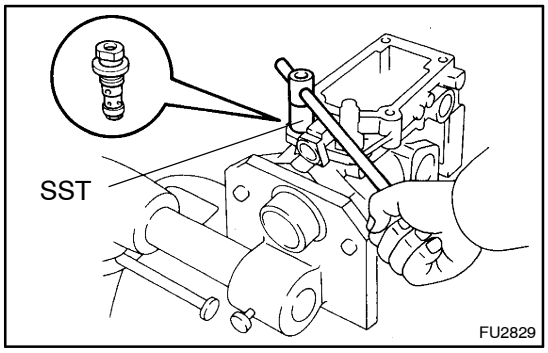

29. REMOVE REGULATOR VALVE

Using SST, remove the regulator valve and 2 O–rings.

SST 09260–54012 (09262–54020)

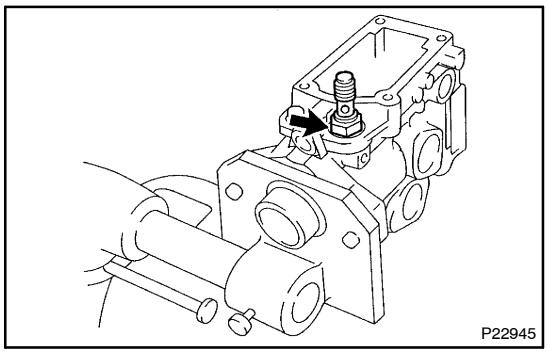

30. REMOVE FUEL INLET HOLLOW SCREW

Remove the hollow screw and gasket.