FU05D–01

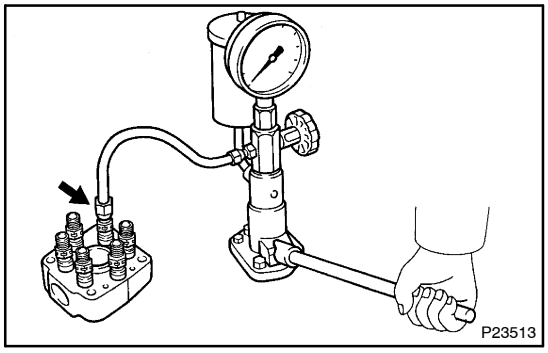

INSPECTION

1. 1HD–T:
INSPECT DELIVERY VALVES

(a) Attach the nozzle tester to the delivery valve holder of the pipe you wish to measure.

(b) Use the nozzle tester to check the valve opening pressure of the delivery valve.
Standard valve opening pressure:
7,350 – 8,330 kPa
(75 – 85kgf/cm^2, 1,067 – 1,209 psi)

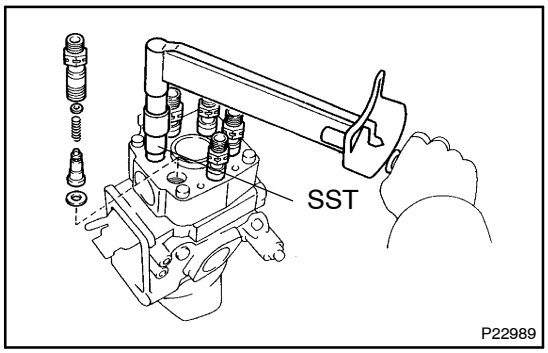

If the valve opening pressure of the delivery valve is not within specification, replace the delivery valve assembly.

SST 09260–54012 (09269–54020)
Torque: 58.85 N·m (600 kgf·cm, 43 ft·lbf)

NOTICE:
Do not lose the steel ball when doing an overhaul.

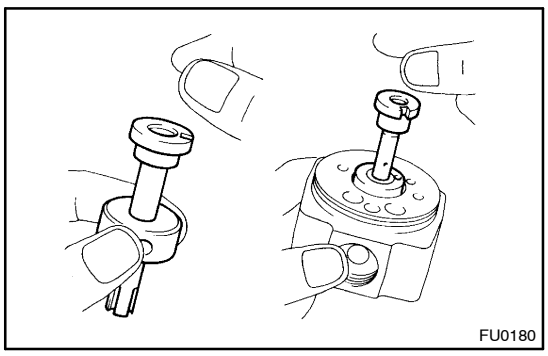

2. INSPECT PUMP PLUNGER, SPILL RING AND DISTRIBUTIVE HEAD

(a) Tilt the spill ring (distributive head) slightly and pull out the plunger.

(b) When released, the plunger should sink down smoothly into the spill ring (distributive head) by its own weight.

(c) Rotate the plunger and repeat the test at various positions.

If the plunger sticks at any position, replace the parts as a set.

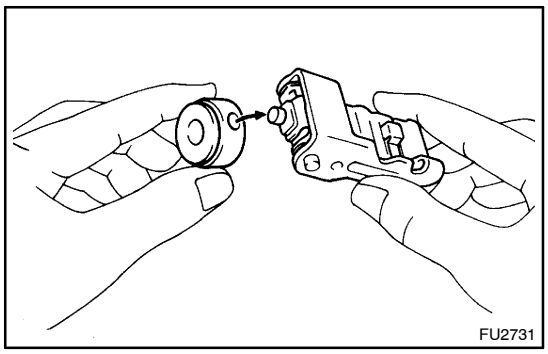

(d) Insert the governor link ball pin into the spill ring and check that it moves smoothly without any play.

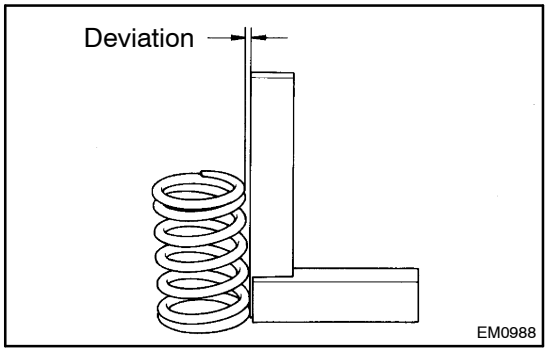

3. INSPECT PLUNGER SPRINGS FOR DEVIATION

Using a steel square, check the deviation of the plunger springs.

Maximum deviation: 2.0 mm (0.079 in.)

If deviation is greater than maximum, replace the springs.

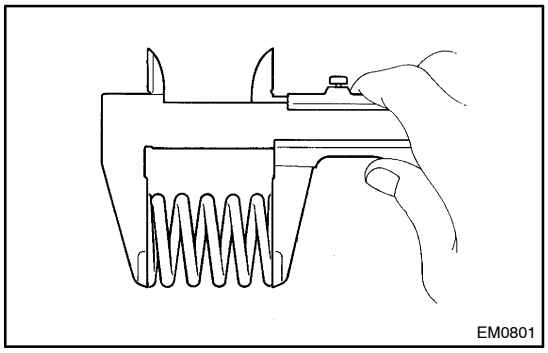

4. INSPECT SPRING LENGTH

Using vernier calipers, measure the free length of each spring.

Spring free length:

Delivery valve spring:

1HZ	24.4 mm (0.961 in.)
1HD–T	12.6 mm (0.496 in.)

Plunger spring:

1HZ	30.0 mm (1.181 in.)
1HD–T	31.2 mm (1.228 in.)

Coupling spring:

1HZ	16.6 mm (0.654 in.)
1HD–T	15.5 mm (0.610 in.)

1HZ (w/ HAC):

Pneumatic bellows spring: 35.0 mm (1.378 in)

1HD–T:

Boost compensator spring: 19.4 mm (0.764 in.)

If the free length is not as specified, replace the spring (s).

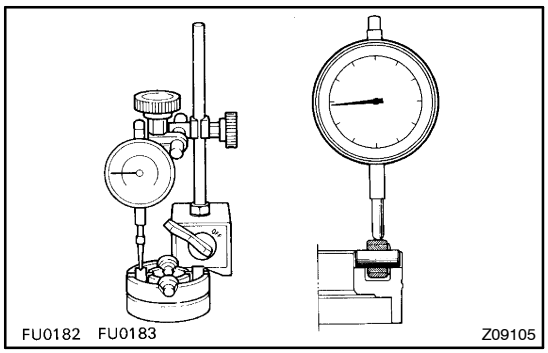

5. INSPECT ROLLER RING AND ROLLERS

Using a dial indicator, measure the roller height.

Maximum roller height variation: 0.02 mm (0.0008 in.)

If the variation is greater than specification, replace the roller ring and roller as a set.

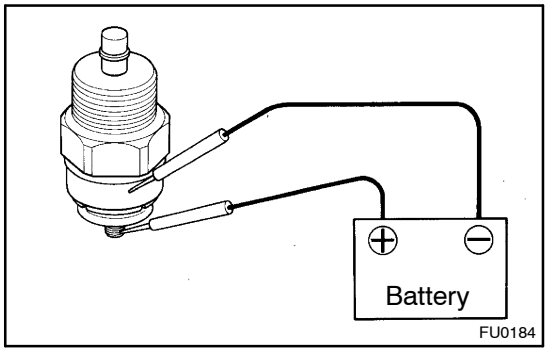

6. INSPECT FUEL CUT SOLENOID

(a) Connect the solenoid valve body and terminal to the battery terminals.

(b) You should feel the click from the solenoid valve when the battery power is connected and disconnected.
If the solenoid valve is not operating properly, replace it.

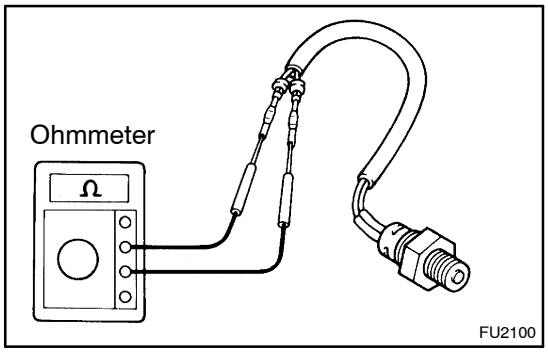

7. INSPECT PICKUP SENSOR

Using an ohmmeter, measure the resistance between the terminals.

Resistance: 650 –970 Ω

If resistance is not as specified, replace the sensor.