FU05E–01

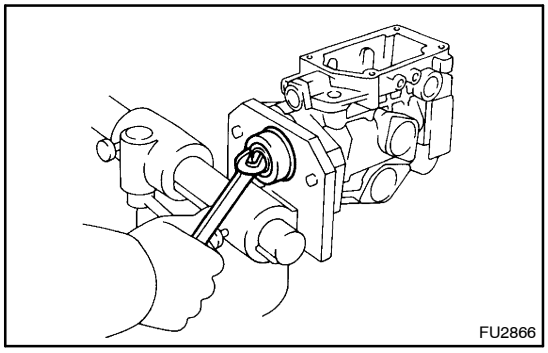
FU2866

REPLACEMENT

REPLACE OIL SEAL

(a) Using a wrench, pry out the oil seal.

NOTICE:

Be careful not to damage to the pump body.

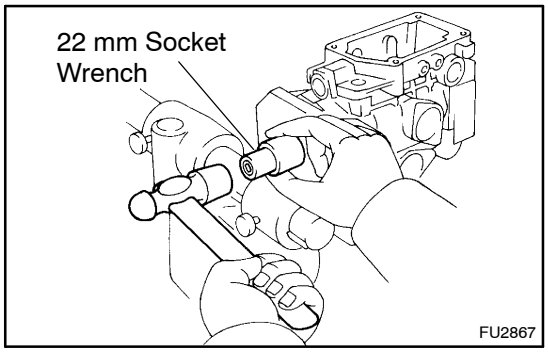

FU2867

(b) Apply MP grease to the lip of a new oil seal.

(c) Using a 22 mm socket wrench, tap in the oil seal until its surface is flush with the pump housing.