FU05F–02

# ADJUSTMENT

1. A/T:
   REMOVE THROTTLE POSITION SENSOR AND BRACKET ASSEMBLY (See page FU–53)
2. REMOVE FUEL CUT VALVE CONTROL UNIT (See page FU–53)
3. REMOVE FUEL PIPES (See page FU–53)
4. w/ A/C:
   REMOVE IDLE UP ACTUATOR

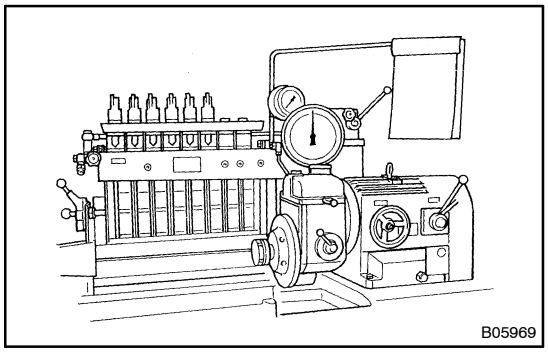


5. PRE–TEST CHECK AND PREPARATION

(a) The specifications for test nozzle and nozzle holders are as follows.
**Test nozzle: DN12SD12 (DENSO)**
**Test nozzle opening pressure:**
**14,220 – 15,200 kPa**
**(145 – 155 kgf/cm$^2$, 2,062 – 2,205 psi)**

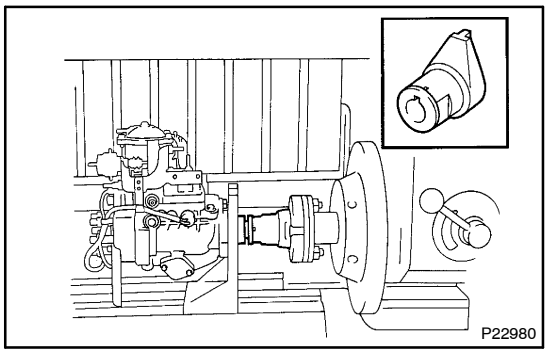


(b) Check the accuracy of the tachometer.
**Allowable error: ± 40 rpm**

(c) Install the angle gauge stand.

(d) Mount the injection pump body on the pump tester.

HINT:
Place a mark on the key groove portion of the coupling.

**NOTICE:**
**To prevent vibration or dislocation of the injection pump, fix in place the distributive head of the injection pump.**

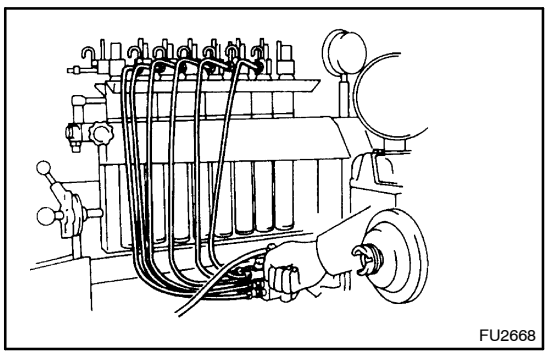


(e) Install an injection pipe with these specifications.

| | |
|---|---|
| Outer Diameter | 6.0 mm (0.236 in.) |
| Inner diameter | 2.0 mm (0.079 in.) |
| Length | 840 mm (33.07 in.) |
| Minimum bending radius | 25 mm (0.98 in,) or more |

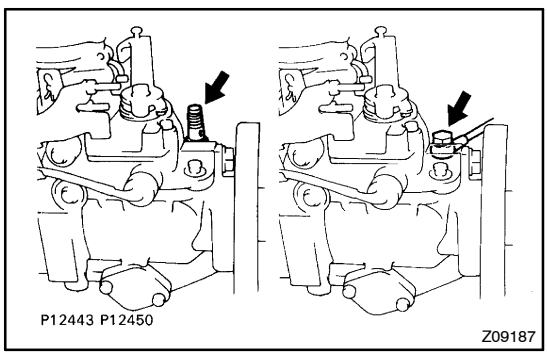


(f) Remove the fuel inlet hollow screw.

(g) Connect the fuel inlet pipe with an adapter.

**1HZ (w/ HAC) and 1HD–T**

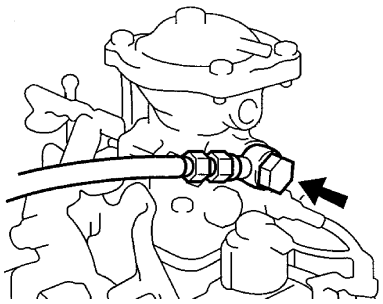

**1HZ (w/o HAC)**

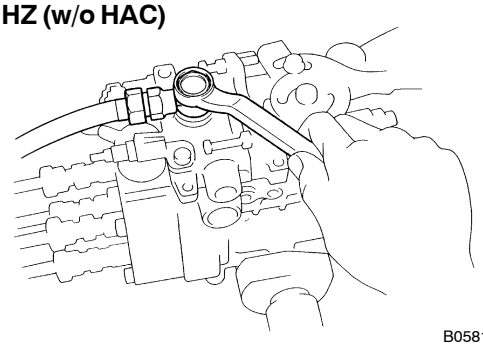

B05813

(h) Install an overflow hose with 2 gaskets and union bolts.

HINT:

Always use the overflow screw installed on the pump to be adjusted.

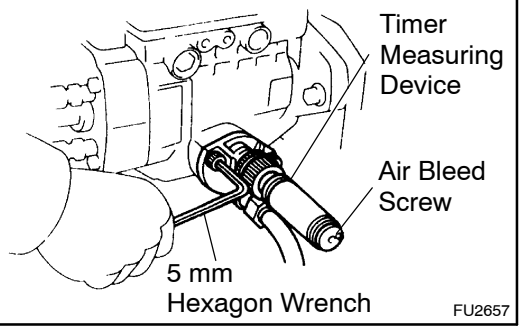


FU2657

(i) Using a 5 mm hexagon wrench, remove the 2 bolts and RH timer cover.

(j) Install the inner pressure gauge with the timer measuring device.

**Part No. 95095–10231 and 95095–10480 (DENSO)**

HINT:

Bleed the air by the air bleed screw.

(k) 1HD–T:

Connect SST (turbocharger pressure gauge) to the boost compensator.

SST 09992–00242

**1HZ**

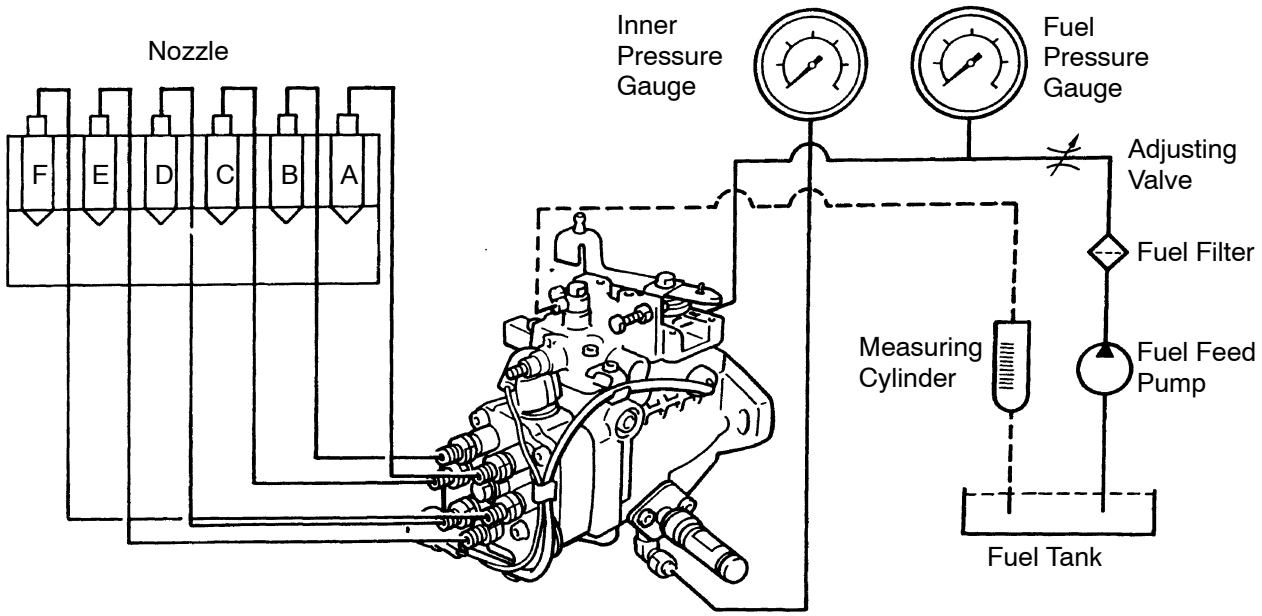


**1HD–T**

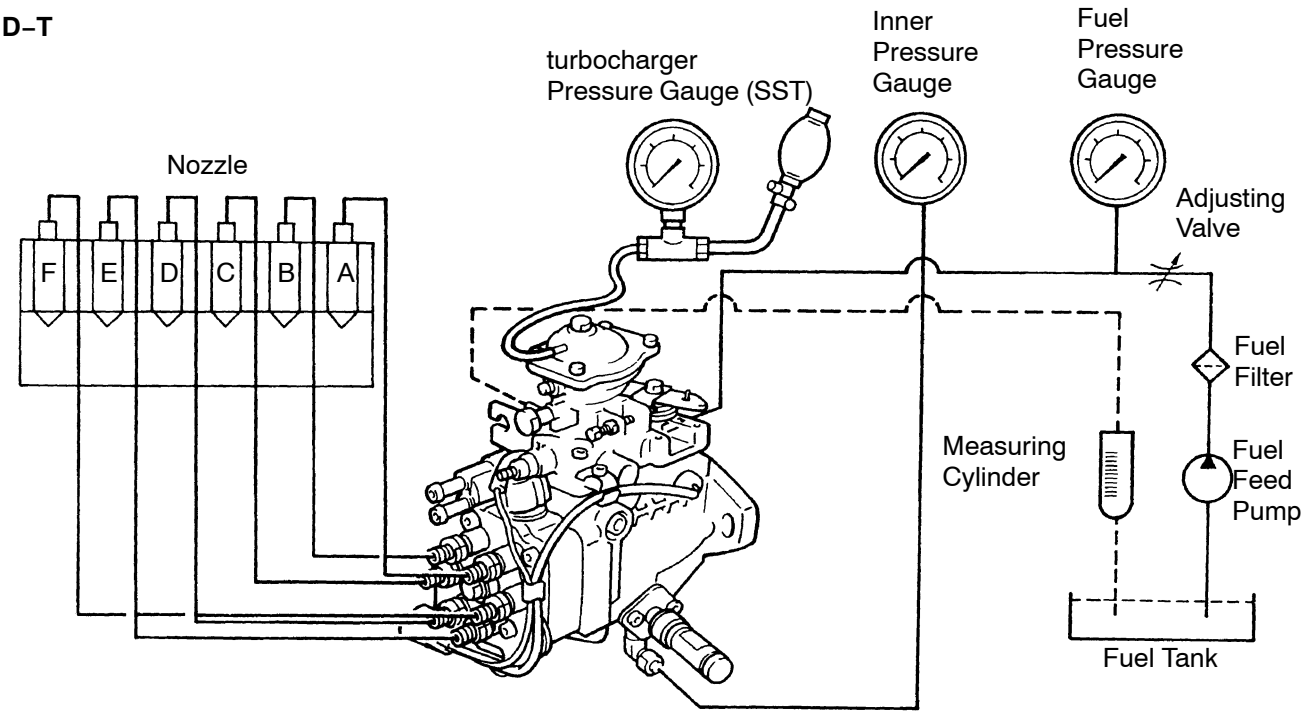


FU2720
FU2722

B05768

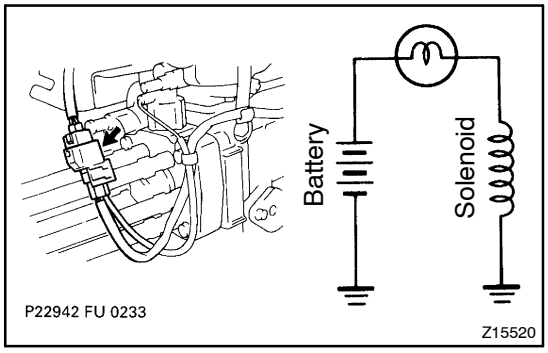


(l) Apply about 6 volts of DC power to the fuel cut solenoid.

**NOTICE:**

- **When applying voltage to the solenoid, position the battery as far away from the solenoid as possible so that a spark does not occur.**
- **when connecting the battery cable, connect the solenoid side first.**

(m) The pressure for feeding fuel to the injection pump should be 20 kPa (0.2 kgf/cm$^2$, 2.8 psi). The fuel temperature for pump testing should be 40 – 45°C (104 – 113°F).

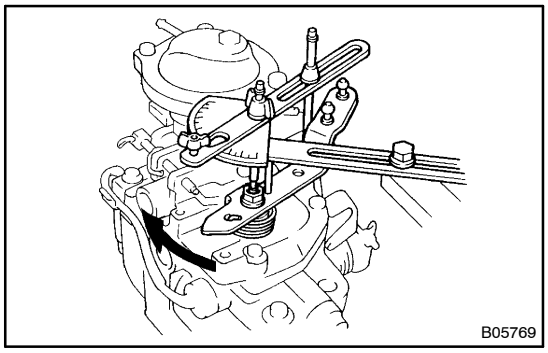


(n) Install an angle gauge to the stand and set it to the adjusting lever.

**Part No. 95095–10360 (Stand w/ angle gauge)**

(o) Secure the adjusting lever fully on the maximum speed side.

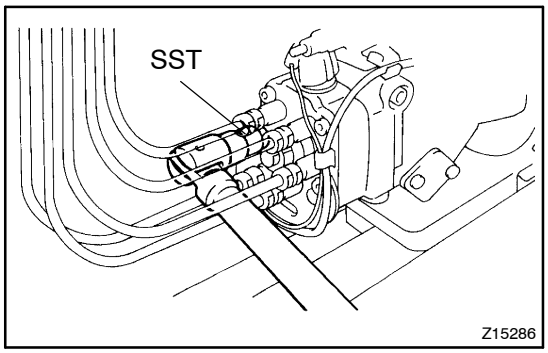


(p) Check the installation direction of the camplate as follows:

- Disconnect the injection pipe from the position marked ”C” on the distributive head.
- Using SST, remove the delivery valve holder assembly and gasket.

SST 09260–54012 (09269–54020)

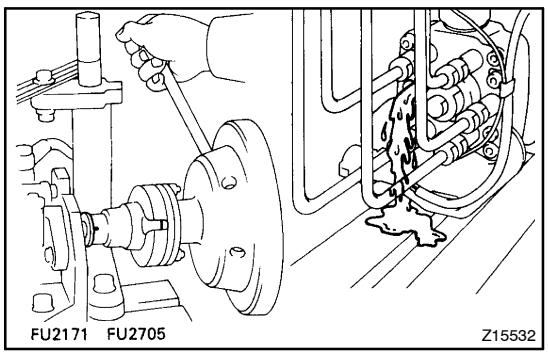


- Check that fuel is flowing out when the mark is in the position shown in the illustration.

If not, it is improperly assembled.

- Disassemble and change the camplate position 180° in the opposite direction.

HINT:

At this time, disconnect the fuel cut solenoid wire harness.

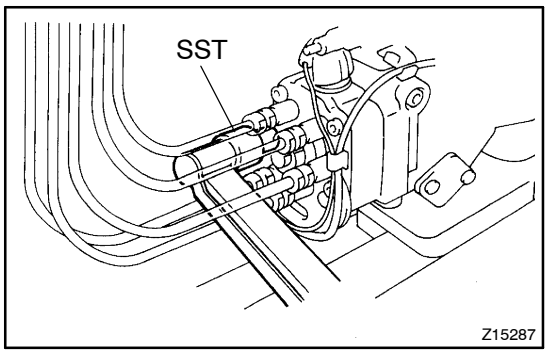


- Using SST, install a new gasket and the delivery valve holder assembly.

SST 09260–54012 (09269–54020)

**Torque: 59 N·m (600 kgf·cm, 43 ft·lbf)**

- Connect the injection pipe.

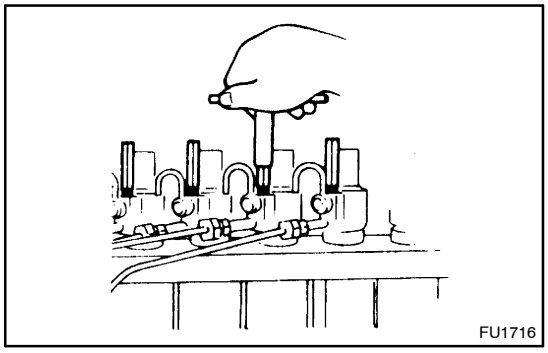
FU1716

(q) Bleed the air from the injection pipes.
(r) Measure the injection volume.

| Pump rpm | No. of measuring strokes | Each injection volume cc (cu in.) |
|---|---|---|
| 1,080 | 200 | 14.92 – 16.52 (0.91 – 1.01) |

(s) Race the injection pump for 5 minutes at 1,200 rpm.

**NOTICE:**

**Check that there is no fuel leakage or abnormal noise.**

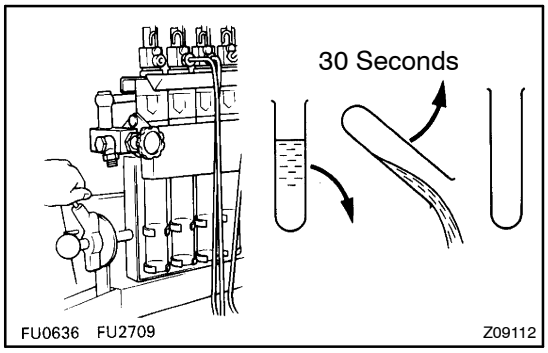

FU0636 FU2709 Z09112

HINT:

- Measure the volume of each injection cylinder with a measuring cylinder.
- Before measuring the injection volume, first hold the cylinder tilted for at least 30 seconds to discard all the fuel.

**6. PRE–SET FULL LOAD INJECTION VOLUME**

(a) Set the adjusting lever to maximum position.
(b) 1HZ (w/ HAC):
Apply 101.3 ± 0.2 kPa (760 ± 1.5 mmHg, 29.92 ± 0.06 in.Hg) absolute pressure.
(c) 1HD–T (w/o BACS):
Apply 80 kPa (0.81 kgf/cm$^2$, 11.5 psi) of pressure to the boost compensator.
(d) 1HD–T (w/ BACS:)
Apply 129 kPa (1.32 kgf/cm$^2$, 18.7 psi) of pressure to the boost compensator.
(e) Measure the injection volume.

| Item | Pump rpm | No. of measuring strokes | Each injection volume cc (cu in.) |
|---|---|---|---|
| 1HZ | 1,200 | 200 | 11.84 – 12.24 (0.72 – 0.75) |
| 1HD–T (Philippine) | 1,100 | 200 | 11.74 – 12.94 (0.72 – 0.79) |
| 1HD–T (Others) | 1,100 | 200 | 12.18 – 13.38 (0.74 – 0.82) |

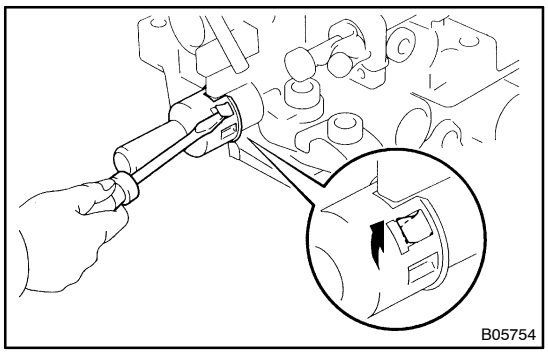
B05754

(f) Remove the cap seal.
(1) Using a small screwdriver, pry the claws.
(2) Remove the cap seal.

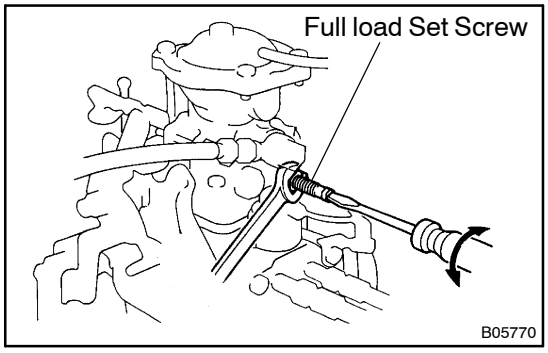


(g) Adjust by turning the full load set screw.

HINT:

The injection volume will increase about 3 cc (0.18 cu in.) with each 1/2 turn of the screw.

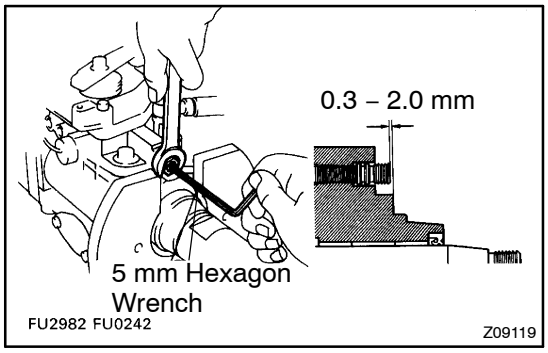


**7. Except 1HD–T (w/BACS):**
**PRE–SETTING OF LOAD SENSING TIMER**

Using a 5 mm hexagon wrench, adjust the protrusion of the governor shaft.

**Protrusion: 0.3 – 2.0 mm (0.012 – 0.079 in.)**

**8. PRE–SET MAXIMUM SPEED**

(a) Set the adjusting lever to maximum position.

(b) 1HZ (w/ HAC):
Apply 101.3 ± 0.2 kPa (760 ± 1.5 mmHg, 29.92 ± 0.06 in.Hg) absolute pressure.

(c) 1HD–T:
Apply 80 kPa (0.81 kgf/cm$^2$, 11.5 psi) of pressure to the boost compensator.

(d) Measure the injection volume.

| Item | Pump rpm | No. of measuring strokes | Each injection volume cc (cu in.) |
|---|---|---|---|
| 1HZ | 2,300 | 200 | 4.6 – 6.6 (0.28 – 0.40) |
| 1HD–T | 2,200 | 200 | 1.8 – 4.2 (0.11 – 0.26) |

(e) Cut off the seal wire.

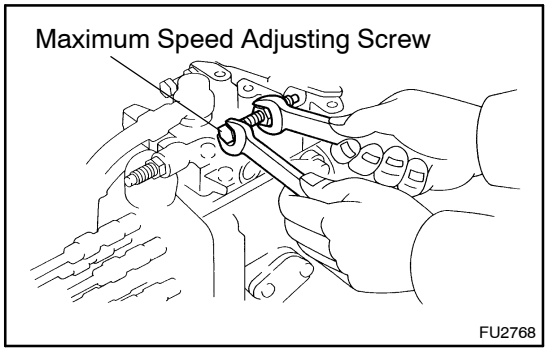


(f) Adjust the injection volume with the maximum speed adjusting screw.

**9. ADJUST PUMP INNER PRESSURE**

(a) Measure the pump inner pressure at the below listed rpm.

| Item | Pump rpm | Inner pressure kPa (kgf/cm$^2$, psi) |
|---|---|---|
| 1HZ | 500 | 343 – 402 (3.5 – 4.1, 49 – 58) |
| | 1,900 | 765 – 824 (7.8 – 8.4, 111 – 119) |
| 1HD–T | 500 | 196 – 294 (2.0 – 3.0, 28 – 43) |
| | 1,800 | 834 – 932 (8.5 – 9.5, 121 – 135) |

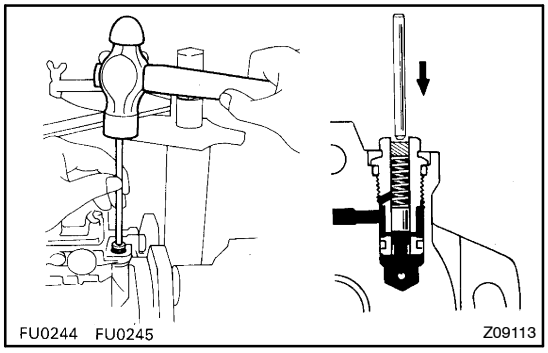


(b) If the pressure is low, adjust by lightly tapping the regulator valve piston while watching the pressure gauge.

HINT:
If the pressure is too high or if the regulator valve was tapped in too far, the regulator valve must be replaced.

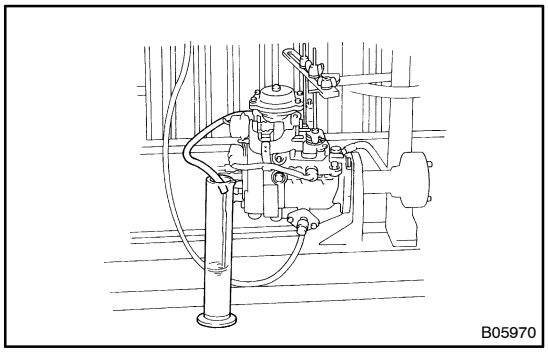


**10. CHECK OVERFLOW VOLUME**

Measure the overflow volume at the below listed rpm.

| Item | Pump rpm | Overflow volume cc/min. (cu in./min.) |
|---|---|---|
| 1HZ | 2,000 | 366 – 800 (22.3 – 48.8) |
| 1HD–T | 1,800 | 666 – 1,167 (40.6 – 71.2) |

HINT:
Always use the overflow screw installed on the pump to be adjusted.

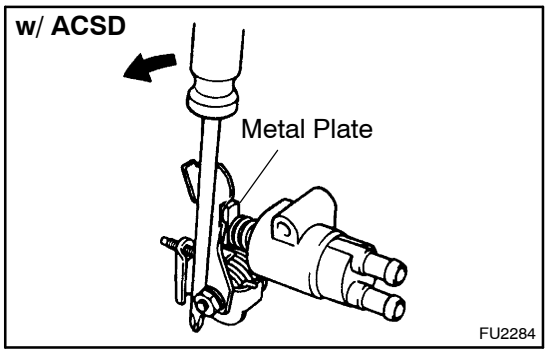


**11. w/ ACSD:**
**RELEASE COLD STARTING SYSTEM FOR NEXT INSPECTIONS**

(a) Using a screwdriver, turn the cold starting lever counterclockwise approx. 20°.

(b) Put a metal plate (thickness of 5.0 – 8.0 mm (0.20 – 0.31 in.)) between the cold starting lever and thermo wax plunger.

HINT:
Keep the cold starting system released until all measurements and adjustments are finished.

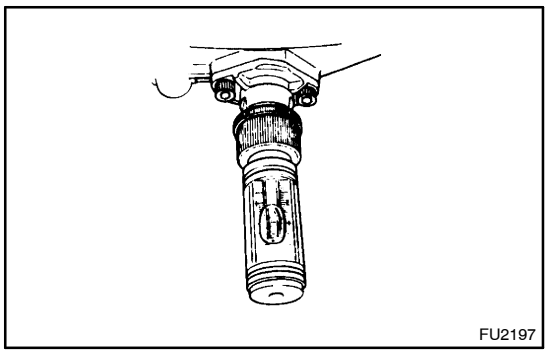


**12. ADJUST TIMER**

(a) Set the timer measuring device at zero.

(b) Measure the timer piston stroke at the below listed rpm.

| Item | Pump rpm | Timer piston stroke mm (in.) |
|---|---|---|
| 1HZ (w/ACSD) | 800 | 1.84 – 2.84 (0.0724 – 0.1118) |
| | 1,200 | 3.70 – 4.70 (0.1457 – 0.1850) |
| | 1,520 | 5.18 – 6.18 (0.2039 – 0.2433) |
| | 1,900 | 6.95 – 7.65 (0.2736 – 0.3012) |
| 1HZ (w/o ACSD) | 800 | 0.61 – 1.61 (0.0240 – 0.0634) |
| | 1,200 | 2.47 – 3.47 (0.0972 – 0.1366) |
| | 1,520 | 3.95 – 4.95 (0.1556 – 0.1949) |
| | 1,900 | 5.72 – 6.72 (0.2252 – 0.2647) |
| 1HD–T (Philippine) | 1,300 | 0.95 – 1.95 (0.0374 – 0.0768) |
| | 1,440 | 2.25 – 3.25 (0.0886 – 0.1280) |
| | 1,800 | 5.50 – 6.50 (0.2165 – 0.2559) |
| | 2,350 | 7.70 – 8.70 (0.3031 – 0.3425) |
| 1HD–T (Others) | 1,000 | 0.44 – 1.44 (0.0173 – 0.0567) |
| | 1,440 | 3.25 – 4.25 (0.1280 – 0.1673) |
| | 1,800 | 5.55 – 6.55 (0.2185 – 0.2579) |
| | 2,350 | 7.70 – 8.70 (0.3031 – 0.3425) |

HINT:
Check that the hysteresis is within 0.3 mm (0.012 in.).

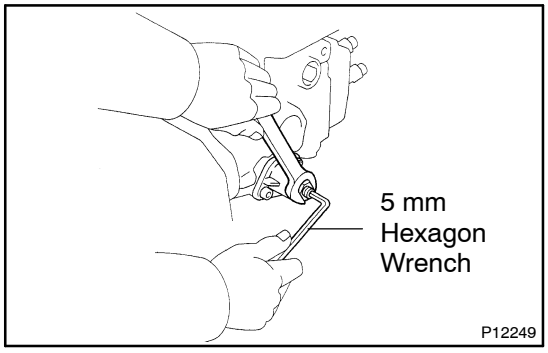


(c) Using a 5 mm hexagon wrench, adjust by turning the timer adjusting screw.

HINT:
Turn clockwise to reduce the stroke, turn counterclockwise to increase the stroke.

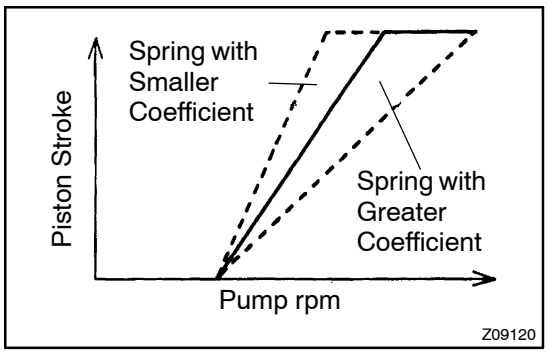


(d) Check the timer stroke for characteristic tendency.

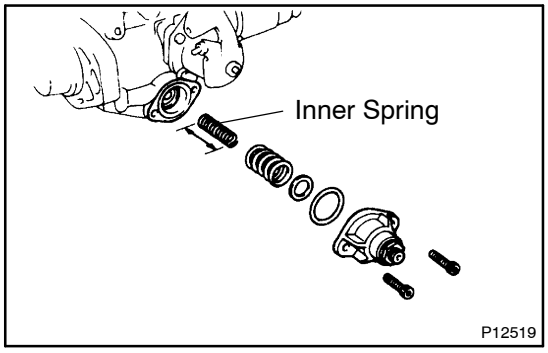


If tendency is not as specified, select and replace the inner spring.

**Timer inner spring with coefficient (k):**

**1HZ: N/mm (kgf/mm)**

| | | |
|---|---|---|
| 1.57 (0.16) | 1.67 (0.17) | 1.77 (0.18) |
| 1.86 (0.19) | 1.96 (0.20) | – |

**1HD–T (Philippine): N/mm (kgf/mm)**

| | | |
|---|---|---|
| 1.08 (0.11) | 1.18 (0.12) | 1.27 (0.13) |
| 1.37 (0.14) | – | – |

**1HD–T (Others): N/mm (kgf/mm)**

| | | |
|---|---|---|
| 1.57 (0.16) | 1.77 (0.18) | 1.96 (0.20) |
| 2.16 (0.22) | – | – |

HINT:
The timer stroke will increase with a long spring and decrease with a short spring.

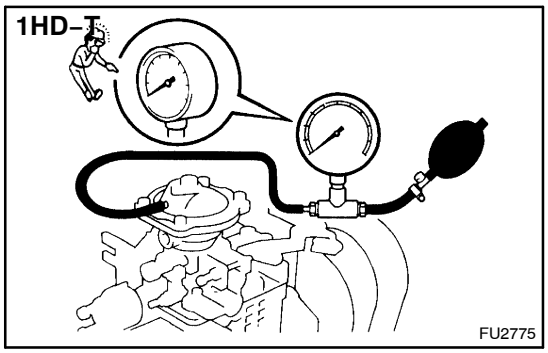


**13. 1HD–T:**
**CHECK BOOST COMPENSATOR FOR AIR TIGHTNESS**

(a) Apply 98 kPa (1.00 kgf/cm$^2$, 14.2 psi) of pressure to the boost compensator.

(b) Measure the time it takes for pressure to drop to 95 kPa (0.97 kgf/cm$^2$, 13.8 psi).
**Pressure drop: 10 seconds or more**

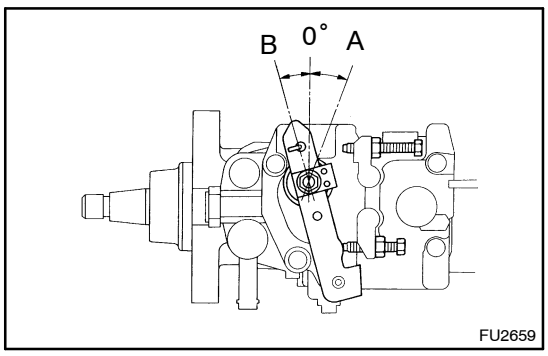


**14. ADJUST FULL LOAD INJECTION VOLUME**

(a) The adjusting lever angle for the adjustment below should be as shown in the illustration.
**Adjusting lever angle:**

| A (Maximum speed side) | B (Idle speed side) |
|---|---|
| Plus 21 – 31° | Minus 12 – 22° |

(b) 1HZ (w/ HAC):
Apply 101.3 ± 0.2 kPa (760 ± 1.5 mmHg, 29.92 ± 0.06 in.Hg) absolute pressure.

(c) 1HD–T (w/o BACS):
Apply 80 kPa (0.81 kgf/cm$^2$, 11.5 psi) of pressure to the boost compensator.

(d) 1HD–T (w/ BACS:)
Apply 129 kPa (1.32 kgf/cm$^2$, 18.7 psi) of pressure to the boost compensator.

(e) Measure the full load injection volume.

| Item | Adjusting lever angle | Pump rpm | No. of measuring strokes | Each injection volume cc (cu in.) |
|---|---|---|---|---|
| 1HZ | Plus 21 – 31° | 1,200 | 200 | 11.84 – 12.24 (0.72 – 0.75) |
| 1HD–T (Philippine) | Plus 21 – 31° | 1,100 | 200 | 11.74 – 12.94 (0.72 – 0.79) |
| 1HD–T (Others) | Plus 21 – 31° | 1,100 | 200 | 12.18 – 13.38 (0.74 – 0.82) |

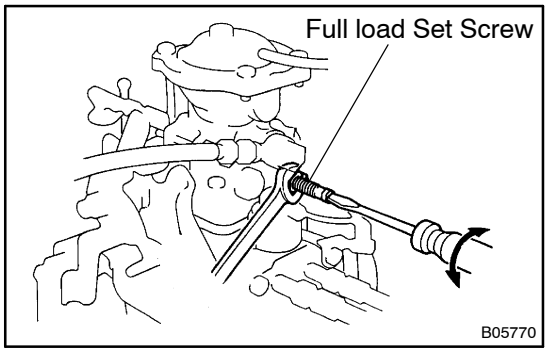


(f) Adjust by turning the full load set screw.

HINT:

The injection volume will increase about 3 cc (0.18 cu in.) with each 1/2 turn of the screw.

**15. ADJUST MAXIMUM SPEED**

(a) 1HZ (w/ HAC):
Apply 101.3 ± 0.2 kPa (760 ± 1.5 mmHg, 29.92 ± 0.06 in.Hg) absolute pressure.

(b) 1HD–T (w/o BACS):
Apply 80 kPa (0.81 kgf/cm$^2$, 11.5 psi) of pressure to the boost compensator.

(c) 1HD–T (w/ BACS):
Apply 129 kPa (1.32 kgf/cm$^2$, 18.7 psi) of pressure to the boost compensator.

(d) Measure the injection volume at each pump rpm.

| Item | Adjusting lever angle | Pump rpm | No. of measuring strokes | Each injection volume cc (cu in.) | Remarks |
|---|---|---|---|---|---|
| 1HZ | Plus 21 – 31° | 2,300 | 200 | 4.6 – 6.6 (0.28 – 0.40) | Adjust |
| | Minus 12 – 22° | 2,300 | | 2.0 (0.12) or less | – |
| 1HD–T | Plus 21 – 31° | 2,200 | 200 | 1.8 – 4.2 (0.11 – 0.26) | Adjust |
| | Minus 12 – 22° | 2,200 | | 1.0 (0.06) or less | – |

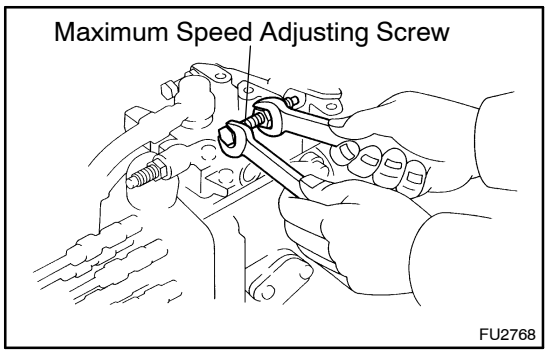


(e) Adjust by turning the maximum speed adjusting screw.

**16. CHECK INJECTION VOLUME**

(a) 1HZ:

Measure the injection volume at each pump rpm and absolute pressure.

| Item | Adjusting lever angle | Pump rpm | Absolute pressure kPa (mmHg, in.Hg) | No. of measuring strokes | Each injection volume cc (cu in.) | Variation limit cc (cu in.) | Remarks |
|---|---|---|---|---|---|---|---|
| 1HZ (w/ HAC) | Plus 21 – 31° | 1,200 | 101.3 (760, 29.92) | 200 | 11.84 – 12.24 (0.72 – 0.75) | 0.5 (0.03) | Basic full–load injection volume |
| | | | 84 (630, 24.80) | | 10.78 – 11.38 (0.66 – 0.69) | – | – |
| | | | 70.7 (530, 20.88) | | 9.82 – 10.24 (0.60 – 0.64) | – | – |
| | | 100 | 101.3 (760, 29.92) | | 10.00 – 14.00 (0.61 – 0.86) | 1.4 (0.09) | Volume during starting |
| | | 500 | | | 10.48 – 11.48 (0.64 – 0.70) | 0.6 (0.04) | – |
| | | 1,500 | | | 11.38 – 12.58 (0.69 – 0.77) | – | – |
| | | 1,900 | | | 10.42 – 11.62 (0.64 – 0.71) | 0.6 (0.04) | – |
| 1HZ (w/o HAC) | Plus 21 – 31° | 1,200 | 101.3 (760, 29.92) | 200 | 11.84 – 12.24 (0.72 – 0.75) | 0.5 (0.03) | Basic full–load injection volume |
| | | 100 | | | 10.00 – 14.00 (0.61 – 0.86) | 1.4 (0.09) | Volume during starting |
| | | 500 | | | 10.48 – 11.48 (0.64 – 0.70) | 0.6 (0.04) | – |
| | | 1,500 | | | 11.38 – 12.58 (0.69 – 0.77) | – | – |
| | | 1,900 | | | 10.42 – 11.62 (0.64 – 0.71) | 0.6 (0.04) | – |

(b) 1HD–T:
Measure the injection volume at each pump rpm and boost pressure.

| Item | Adjusting lever angle | Pump rpm | Boost pressure kPa (kg/cm$^2$, psi) | No. of measuring strokes | Each injection volume cc (cu in.) | Variation limit cc (cu in.) | Remarks |
|---|---|---|---|---|---|---|---|
| 1HD–T (Philippine) | Plus 21 – 31° | 1,100 | 80 (0.81, 11.5) | 200 | 11.74 –12.94 (0.72 – 0.79) | 0.7 (0.04) | Basic full–load injection volume |
| | | 100 | 0 (0, 0) | | 9.50 – 14.30 (0.58 – 0.87) | 1.4 (0.09) | Volume during starting |
| | | 500 | 0 (0, 0) | | 7.30 – 8.10 (0.45 – 0.49) | 0.8 (0.05) | – |
| | | 900 | 80 (0.81, 11.5) | | 11.60 –12.80 (0.71 – 0.78) | – | – |
| | | 1,800 | 80 (0.81, 11.5) | | 12.80 – 13.60 (0.78 – 0.83) | 1.3 (0.08) | – |
| 1HD–T (Others) (w/o BACS) | Plus 21 – 31° | 1,100 | 80 (0.81, 11.5) | 200 | 12.18 –13.38 (0.74 – 0.82) | 0.7 (0.04) | Basic full–load injection volume |
| | | 100 | 0 (0, 0) | | 9.50 – 14.30 (0.58 – 0.87) | 1.4 (0.09) | Volume during starting |
| | | 500 | 0 (0, 0) | | 7.30 – 8.10 (0.45 – 0.49) | 0.8 (0.05) | – |
| | | 900 | 80 (0.81, 11.5) | | 12.26 –13.46 (0.75 – 0.82) | – | – |
| | | 1,800 | 80 (0.81, 11.5) | | 12.50 – 13.30 (0.76 – 0.81) | 1.3 (0.08) | – |
| 1HD–T (Others) (w/ BACS) | Plus 21 – 31° | 1,100 | 129 (1.32, 18.7) | 200 | 12.18 –13.38 (0.74 – 0.82) | 0.7 (0.04) | Basic full–load injection volume |
| | | 100 | 49.3 (0.50, 7.2) | | 9.50 – 14.30 (0.58 – 0.87) | 1.4 (0.09) | Volume during starting |
| | | 500 | 49.3 (0.50, 7.2) | | 7.30 – 8.10 (0.45 – 0.49) | 0.8 (0.05) | – |
| | | 900 | 129 (1.32, 18.7) | | 12.26 –13.46 (0.75 – 0.82) | – | – |
| | | 1,800 | 129 (1.32, 18.7) | | 12.50 – 13.30 (0.76 – 0.81) | 1.3 (0.08) | – |

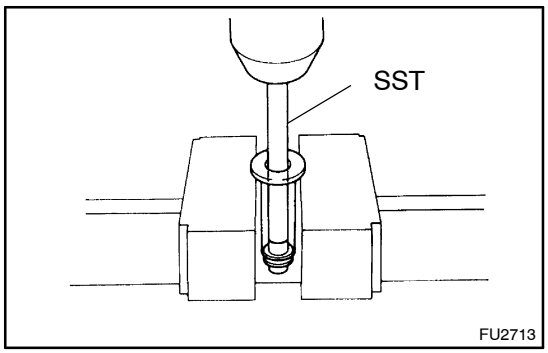


If the injection volume at 100 rpm is not as specified, replace the governor sleeve plug as follows:

- Using SST and a press, press out the sleeve plug assembly from the governor sleeve.

SST 09236–00101 (09237–00070)

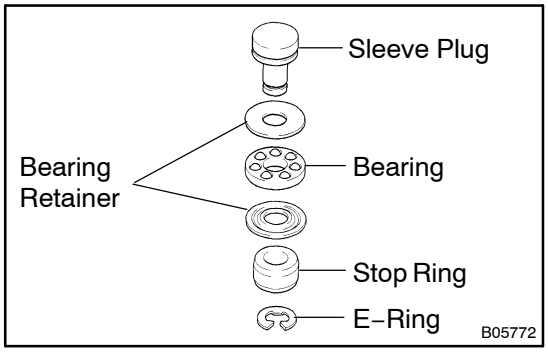


- Remove the E–ring, stop ring, bearing and 2 bearing retainers from the sleeve plug.

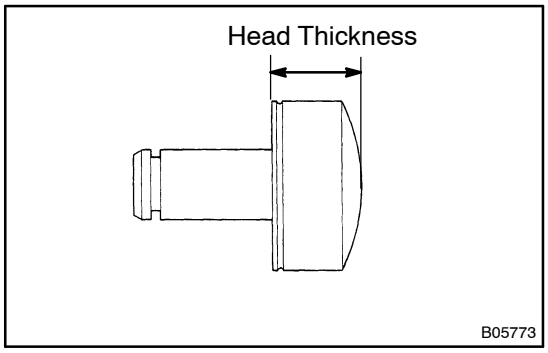


- Measure the head thickness of the sleeve plug, and select a new sleeve plug.

| Sleeve plug head thickness for 1HZ | | mm (in.) |
|---|---|---|
| 3.0 (0.118) | 3.5 (0.138) | 4.0 (0.158) |
| 3.1 (0.122) | 3.6 (0.142) | 4.1 (0.161) |
| 3.2 (0.126) | 3.7 (0.146) | 4.2 (0.165) |
| 3.3 (0.130) | 3.8 (0.150) | |
| 3.4 (0.134) | 3.9 (0.154) | |

| Sleeve plug head thickness for 1HD–T | | mm (in.) |
|---|---|---|
| 3.0 (0.118) | 4.3 (0.169) | 5.6 (0.220) |
| 3.1 (0.122) | 4.4 (0.173) | 5.7 (0.224) |
| 3.2 (0.126) | 4.5 (0.177) | 5.8 (0.228) |
| 3.3 (0.130) | 4.6 (0.181) | 5.9 (0.232) |
| 3.4 (0.134) | 4.7 (0.185) | 6.0 (0.236) |
| 3.5 (0.138) | 4.8 (0.189) | 6.1 (0.240) |
| 3.6 (0.142) | 4.9 (0.193) | 6.2 (0.244) |
| 3.7 (0.146) | 5.0 (0.197) | 6.3 (0.248) |
| 3.8 (0.150) | 5.1 (0.201) | 6.4 (0.252) |
| 3.9 (0.154) | 5.2 (0.205) | 6.5 (0.256) |
| 4.0 (0.158) | 5.3 (0.209) | 6.6 (0.260) |
| 4.1 (0.161) | 5.4 (0.213) | |
| 4.2 (0.165) | 5.5 (0.216) | |

HINT:
Lengthening the plug by 0.1 mm (0.004 in.) will decrease injection volume by 0.6 cc (0.04 in.).
If the variation limit is greater than specified, replace the delivery valve.

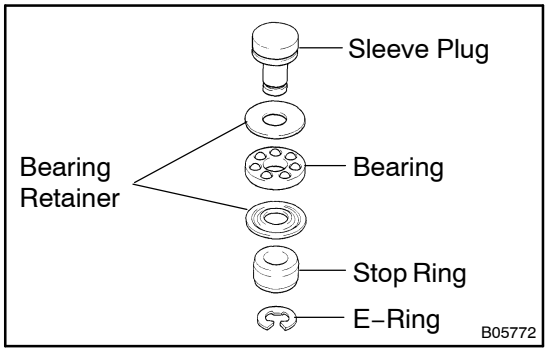


- Install the bearing , 2 bearing retainer and stop ring to the new sleeve plug with a new E–ring:

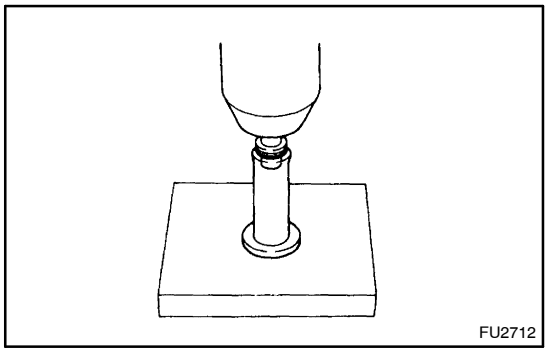


- Using a press, press in the sleeve plug assembly to the governor sleeve.

**17. 1HD–T:**

**ADJUST FULL LOAD MINIMUM INJECTION VOLUME**

(a) Set the adjusting lever to maximum position.

(b) Release the pressure from the boost compensator.

(c) Measure the injection volume.

**w/o BACS:**

| Pump rpm | No. of measuring strokes | Each injection volume cc (cu in.) |
|---|---|---|
| 500 | 200 | 7.30 – 8.10 (0.45 – 0.49) |

**w/ BACS:**

| Pump rpm | No. of measuring strokes | Each injection volume cc (cu in.) |
|---|---|---|
| 500 | 200 | 5.60 – 6.40 (0.34 – 0.39) |

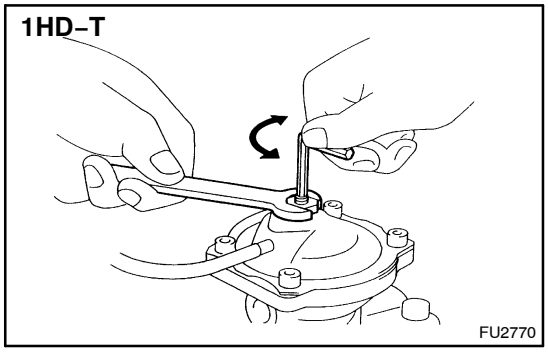


(d) Using a 5 mm hexagon wrench, adjust by turning the timer slide pin.

**18. 1HD–T:**

**ADJUST BOOST COMPENSATOR CHARACTERISTIC**

(a) Apply pressure to the boost compensator.

(b) Measure the injection volume.

| Item | Pump rpm | Boost pressure kPa (kg/cm$^2$, psi) | No. of measuring strokes | Each injection volume cc (cu in.) |
|---|---|---|---|---|
| Philippine | 1,100 | 37.4 (0.38, 5.4) | 200 | 10.92 – 12.10 (0.67 – 0.74) |
| Others (w/o BACS) | 1,100 | 37.4 (0.38, 5.4) | 200 | 10.84 – 12.04 (0.66 – 0.73) |
| Others (w/ BACS) | 500 | 49.3 (0.50, 7.2) | 200 | 7.30 – 8.10 (0.45 – 0.49) |

1HD–T

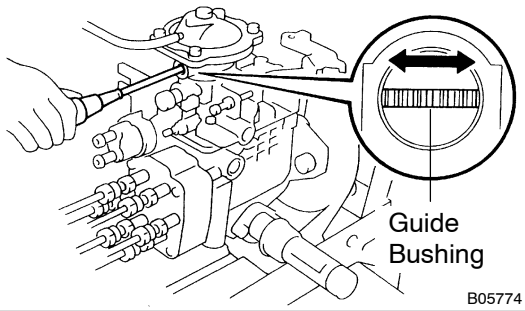


(c) Using a screwdriver, adjust the injection volume by the guide busing.

HINT:

When the guide bushing is turned clockwise, as seen from above, the injection volume will increase.

1HD–T

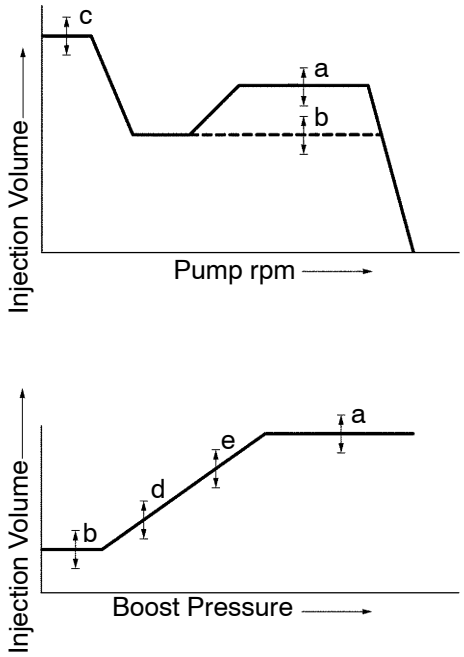


(a) Adjust full–load injection volume
(b) Adjust full–load minimum injection volume
(c) Adjust cold starting injection volume
(d) Adjust boost compensator characteristic
(e) Adjust boost compensator characteristic tendency

B00473
B00472
B00904

**19. 1HD–T:**
**CHECK FOR CHARACTERISTIC TENDENCY**

(a) Apply pressure to the boost compensator.
(b) Measure the injection volume.

| Item | Pump rpm | Boost pressure kPa (kg/cm$^2$, psi) | No. of measuring strokes | Each injection volume cc (cu in.) |
|---|---|---|---|---|
| Philippine | 1,100 | 30.7 (0.31, 4.4) | 200 | 9.20 – 10.00 (0.56 – 0.61) |
| Others (w/o BACS) | 1,100 | 24.0 (0.24, 3.5) | 200 | 9.54 – 10.74 (0.58 – 0.66) |
| Others (w/ BACS) | 500 | 86.7 (0.88, 12.6) | 200 | 8.64 – 9.84 (0.53 – 0.60) |

**20. 1HD–T:**
**CHECK HYSTERESIS**

(a) w/o BACS:
Compare the injection volume when the boost compensator pressure is lowered from 80 kPa (0.81 kgf/cm$^2$, 11.5 psi) to 0 kPa (0 kgf/cm$^2$, 0 psi) and, conversely, when it is raised from zero.

(b) w/ BACS:
Compare the injection volume when the boost compensator pressure is lowered from 129 kPa (1.32 kgf/cm$^2$, 18.7 psi) to 0 kPa (0 kgf/cm$^2$, 0 psi) and, conversely, when it is raised from zero.

HINT:
Make measurements after moving the adjusting lever between idle and maximum 3 times for each lowering of the pressure.

| Item | Pump rpm | Boost pressure kPa (kg/cm$^2$, psi) | No. of measuring strokes | Each injection volume cc. (cu in.) | Hysteresis cc. (cu in.) |
|---|---|---|---|---|---|
| Philippine | 1,100 | 80.0 (0.81, 11.5) | 200 | 11.74 – 12.94 (0.72 – 0.79) | – |
| | 1,100 | 37.4 (0.38, 5.4) | 200 | 10.92 –12.10 (0.67 – 0.74) | – |
| | 1,100 | 26.7 (0.27, 3.9) | 200 | 9.20 – 10.00 (0.56 – 0.61) | 0.3 (0.02) or less |
| | 600 | 0 (0, 0) | 200 | 8.76 – 10.16 (0.53 – 0.62) | – |
| Others (w/o BACS) | 1,100 | 80.0 (0.81, 11.5) | 200 | 12.18 – 13.38 (0.74 – 0.82) | – |
| | 1,100 | 37.4 (0.38, 5.4) | 200 | 10.84 – 12.04 (0.66 – 0.73) | – |
| | 1,100 | 24.0 (0.24, 3.5) | 200 | 9.54 – 10.74 (0.58 – 0.66) | 0.3 (0.02) or less |
| | 1,100 | 0 (0, 0) | 200 | 8.38 – 9.78 (0.53 – 0.62) | – |
| (w/ BACS) | 1,100 | 136 (139, 19.7) | 200 | 12.18 – 13.38 (0.74 – 0.82) | – |
| | 500 | 86.7 (0.88, 12.6) | 200 | 8.64 – 9.84 (0.53 – 0.62) | 0.3 (0.02) or less |
| | 500 | 49.3 (0.50, 7.2) | 200 | 7.30 – 8.10 (0.45 – 0.49) | – |
| | 500 | 0 (0, 0) | 200 | 5.60 – 6.40 (0.34 – 0.39) | – |

If not within standard value, check each sliding part of the boost compensator and check whether or not there is any oil.

**Except 1HD–T (w/ BACS)**

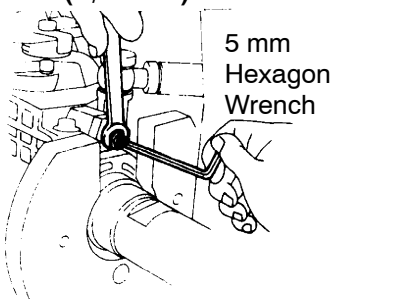


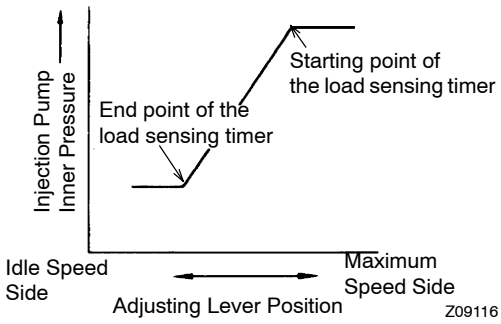


**21. Except 1HD–T (w/BACS):**
**ADJUST LOAD SENSING TIMER**

(a) Using a 5 mm hexagon wrench, adjust the starting and end points of the load sensing timer by turning the governor shaft.

(b) Set the adjusting lever to maximum position.

(c) 1HZ (w/ HAC):
Apply 101.3 ± 0.2 kPa (760 ± 1.5 mmHg, 29.92 ± 0.06 in.Hg) absolute pressure.

(d) 1HD–T:
Apply 80 kPa (0.81 kgf/cm$^2$, 11.5 psi) of pressure to the boost compensator.

(e) Measure the injection volume.

| Item | adjusting lever position | Pump rpm | No. of measuring strokes |
|---|---|---|---|
| 1HZ | Maximum speed side | 1,520 | 200 |
| 1HD–T | Maximum speed side | 1,440 | 200 |

**Except 1HD–T (w/ BACS)**

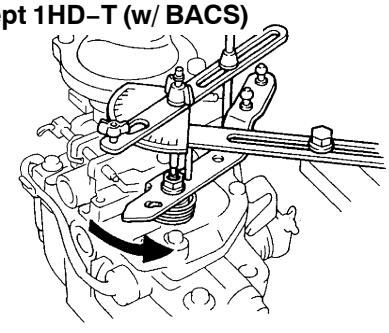


(f) Slowly move the adjusting lever from the maximum speed side to the idle speed side, and secure it at the point where the pump inner pressure begins to drop.

(g) Measure the injection volume at the drop point (starting point).

| Item | Pump rpm | No. of measuring strokes | Each injection volume cc (cu in.) |
|---|---|---|---|
| 1HZ | 1,520 | 200 | Measured value at step (f) minus 1.4 (0.09) ± 0.4 (0.02) |
| 1HD–T | 1,800 | 200 | Measured value at step (f) minus 1 – 1.6 (0.06 – 0.01) |

**Except 1HD–T (w/ BACS)**

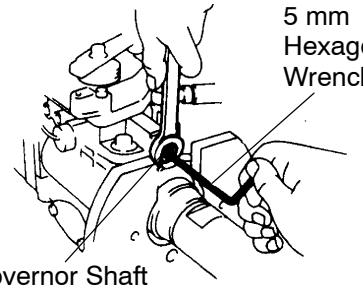


(h) Using a 5 mm hexagon wrench, adjust the load sensing timer by turning the governor shaft, and to the measurement again as specified.

HINT:
The injection volume will increase approx. 3 cc (0.2 cu in.) with each 1/2 turn of the governor shaft.

(i) 1HZ:
Check the end point injection volume by slowly moving the adjusting lever from the maximum speed side to the idle speed side, and secure it at the point where the pump inner pressure stops dropping.

| Pump rpm | No. of measuring strokes | Each injection volume cc (cu in.) |
|---|---|---|
| 1,520 | 200 | 7.6 (0.46) or more |

(j) 1HD–T (Philippine):
Check the timer piston stroke when the pump rpm is 1,800 rpm and timer piston stroke is maximum delayed.
**Timer piston stroke: 3.7 mm (0.146 in.) or more**

(k) 1HD–T (Others):
Check the injection volume when the pump rpm is 1,440 rpm and injection volume is 7.0 – 7.8 cc (0.43 – 0.48 cu in.).
**Timer piston stroke: 2.5 mm (0.098 in.) or less**

HINT:
The end point for 1HD–T engine is hard to identify, so use the methods used in the (j) or (k) above.

(l) When the adjusting lever is moved slowly from the maximum speed side to the idle speed side.

| Item | Pump rpm | Timer piston fluctuation mm (in.) |
|---|---|---|
| 1HZ (w/ ACSD) | 1,520 | 3.86 – 4.66 (0.1520 – 0.1835) |
| 1HZ (w/o ACSD) | 1,520 | 2.63 – 3.43 (0.1035 – 0.1350) |
| 1HD–T (Philippine) | 1,440 | 0.8 (0.0315) |
| 1HD–T (Others) | 1,440 | 1.5 – 2.5 (0.0591– 0.0984) |

**Except 1HD–T (w/ BACS)**

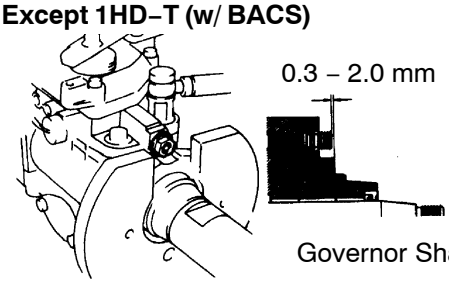


(m) Check the protrusion of the governor shaft.
**Protrusion: 0.3 – 2.0 mm (0.012 – 0.079 in.)**

**22. ADJUST IDLE SPEED**

(a) Measure the injection volume for each pump rpm.

| Item | Adjusting lever angle | Pump rpm | No. of measuring strokes | Each injection volume cc. (cu in.) | Variation limit cc (cu. in.) | Remarks |
|---|---|---|---|---|---|---|
| 1HZ (M/T) | Minus 12 – 22° | 375 | 200 | q = 2.30 – 3.30 (0.14 – 0.20) | – | Pre–set |
| | | 350 | | More than q plus 0.5 (0.03) | – | – |
| | | 450 | | q Minus 1.2 – 2.4 (0.07 – 0.15) | – | |
| | | 325 | | 3.36 – 4.36 (0.21 – 0.27) | 0.5 (0.03) | Adjust |
| 1HZ (A/T) | Minus 12 – 22° | 375 | 200 | q = 2.40 – 3.40 (0.15 – 0.21) | – | Pre–set |
| | | 350 | | More than q plus 0.5 (0.03) | – | – |
| | | 450 | | q Minus 1.2 – 2.4 (0.07 – 0.15) | – | |
| | | 375 | | 2.40 – 3.40 (0.15 – 0.21) | 0.5 (0.03) | Adjust |
| 1HD–T (M/T) | Minus 12 – 22° | 325 | 200 | 0.70 – 1.70 (0.04 – 0.10) | 0.5 (0.03) | Adjust |
| 1HD–T (A/T) | Minus 12 – 22° | 390 | 200 | 0.70 – 1.70 (0.04 – 0.10) | 0.5 (0.03) | Adjust |

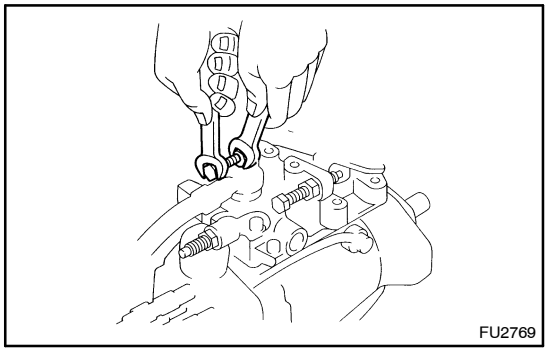


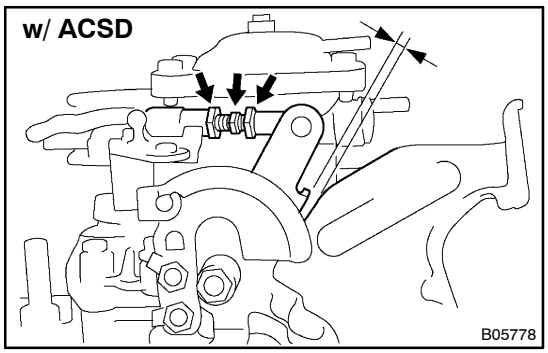


(b) Adjust injection volume by turning the idle speed adjusting screw.

**23. w/ACSD:**
**ADJUST COLD STARTING SYSTEM**

(a) Remove the overflow screw and check the fuel temperature in the fuel pump.
**Fuel temperature: 15 – 35°C (59 – 95°F)**

(b) Check that the cam part of the camplate is not on top of the roller ring.

(c) Set the scale of the timer measuring device to zero.

(d) A/T:
Check the adjusting lever opening angle and consider this angle as zero.

(e) Measure the clearance between the idle–up lever and idle–up lever bracket.
**Clearance: 1.5 – 2.5 mm (0.059 – 0.098 in.)**

(f) Adjust by turning the fast idle adjusting screw.

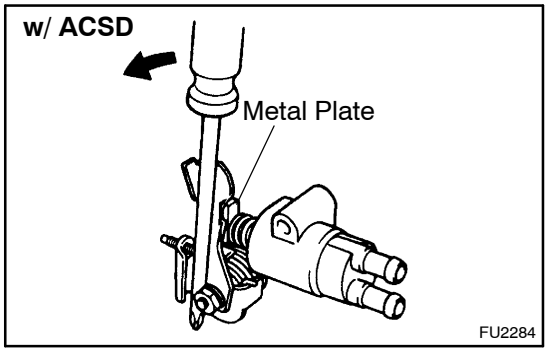


(g) Remove the metal plate between the cold starting lever and thermo wax plunger.

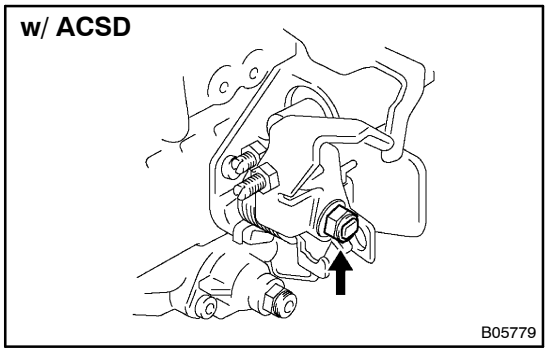


(h) Loosen the nut from the cold starting lever.

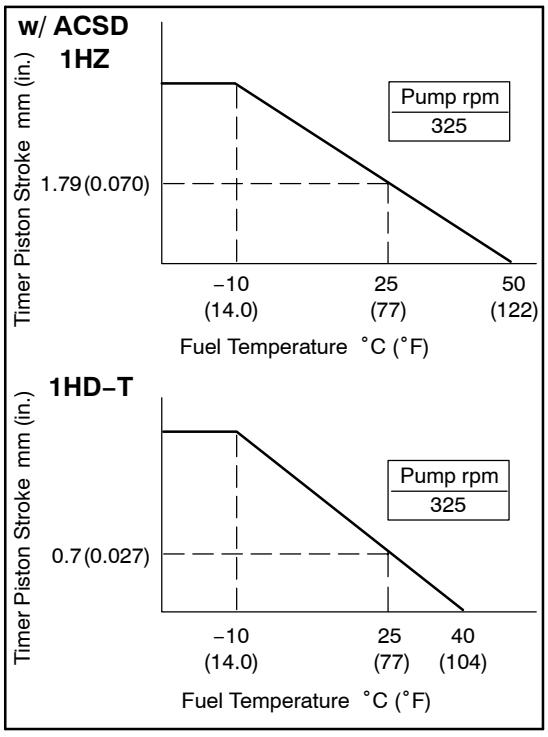


(i) Measure the timer piston stroke.

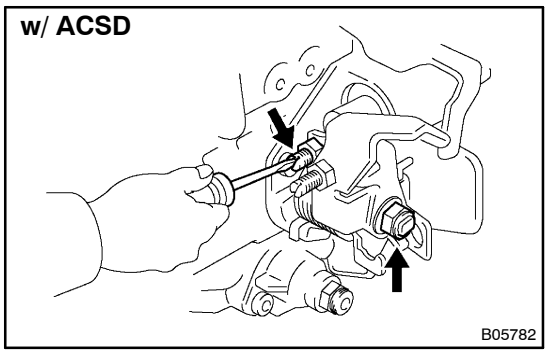


(j) Adjust by turning the timer adjusting screw.

HINT:

Screw in for stroke decrease.

w/ ACSD

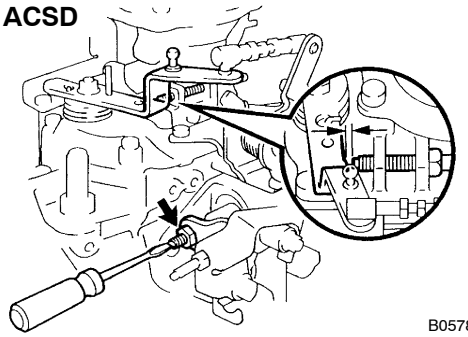

B05780

(k) Measure the clearance between the adjusting lever and idle speed adjusting screw.

| Item | Fuel temperature | Clearance |
|---|---|---|
| 1HZ | 25°C (77°F) | 0.71 mm (0.028 in.) |
| | 40°C (104°F) | 0 mm (0 in.) |
| 1HD–T | 25°C (77°F) | 0.28 mm (0.011 in.) |
| | 40°C (104°F) | 0 mm (0 in.) |

(l) Adjust by turning the cold starting adjusting screw.

w/ ACSD

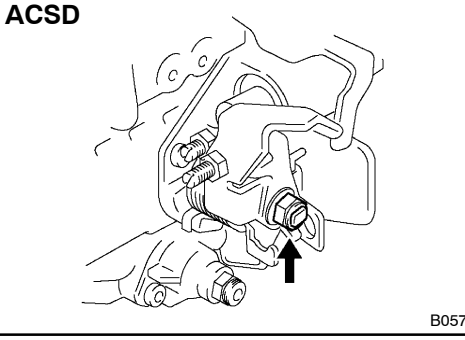

B05779

(m) Torque the nut to the cold starting lever.
**Torque: 13 N·m (137 kgf·cm, 9.5 ft·lbf)**

w/ ACSD

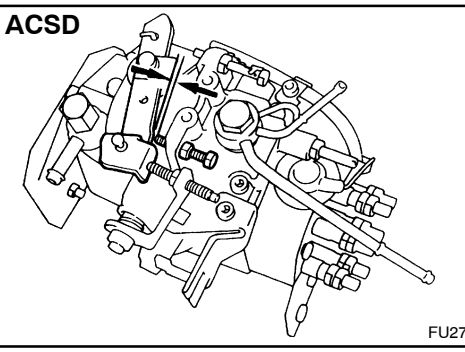

FU2724

**24. w/ ACSD:**
**ADJUST FAST IDLE**

(a) Measure the clearance between the adjusting lever and idle speed adjusting screw.

| Item | Fuel temperature | Clearance |
|---|---|---|
| 1HZ | 25°C (77°F) | 0.71 mm (0.028 in.) |
| | 40°C (104°F) | 0 mm (0 in.) |
| 1HD–T | 25°C (77°F) | 0.28 mm (0.011 in.) |
| | 40°C (104°F) | 0 mm (0 in.) |

w/ ACSD

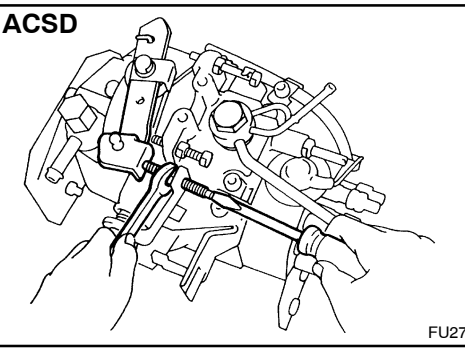

FU2725

(b) Adjust by turning the fast idle adjusting screw.

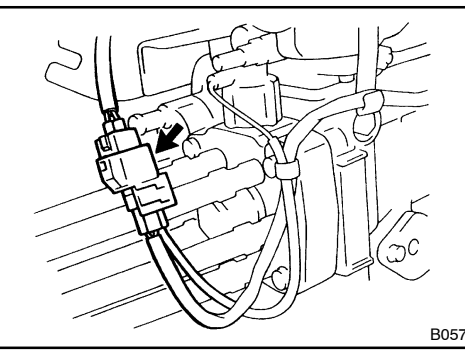

B05783

**25. POST ADJUSTMENT CHECK**

(a) Check that injection stops when the fuel cut solenoid harness is removed.

| Item | Adjusting lever angle | Pump rpm | Each injection volume cc (cu in.) |
|---|---|---|---|
| 1HZ | Minus 12 – 22° | 100 | 0.6 (0.04) |
| 1HD–T | | 300 | |
| | | 1,000 | |

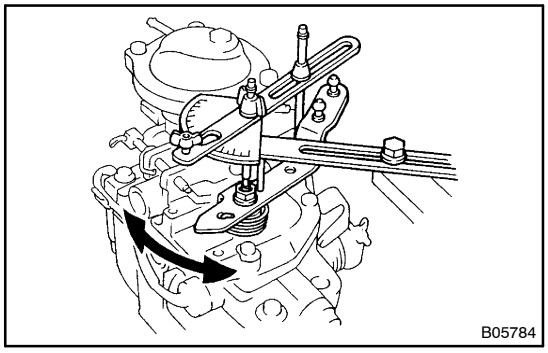


(b) Check the adjusting lever movement.
**Adjusting lever angle: 38 – 48°**

**26. A/T:**
**INSTALL THROTTLE POSITION SENSOR AND BRACKET (See page FU–92)**

**27. SEAL PARTS**

(a) Seal the full load set screw with new cap seal.

(b) Seal the maximum speed adjusting screw with new lead seal.

**28. w/ Fuel Cut Valve Control Unit:**
**INSTALL FUEL CUT VALVE CONTROL UNIT (See page FU–92)**

**29. INSTALL FUEL PIPES (See page FU–92)**

**30. w/ A/C:**
**INSTALL IDLE–UP ACTUATOR**
**Torque: 9.35 N·m (95 kgf·cm, 83 in.·lbf)**

**31. REMOVE INJECTION PUMP FROM SST (STAND)**
SST 09241–76022, 09245–54010