FU05G–02

REASSEMBLY

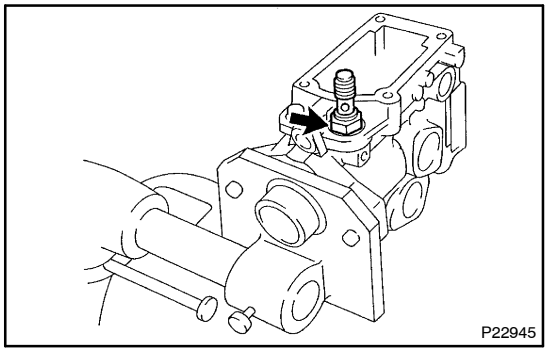

1. INSTALL FUEL INLET HOLLOW SCREW

Install a new gasket and the hollow screw.

Torque: 36.8 N·m (375 kgf·cm, 27 ft·lbf)

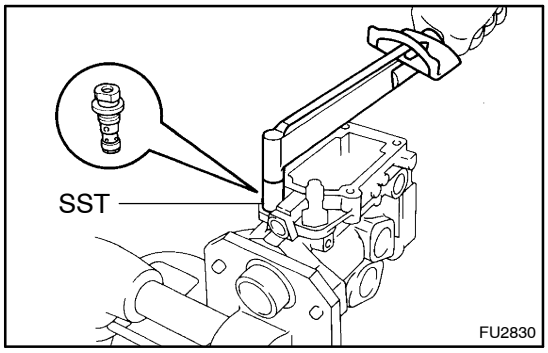

2. INSTALL REGULATOR VALVE

(a) Install 2 new O–rings to the regulator valve.

(b) Using SST, install the regulator valve.

SST 09260–54012 (09262 – 54020)

Torque: 8.8 N·m (90 kgf·cm, 78 in.·lbf)

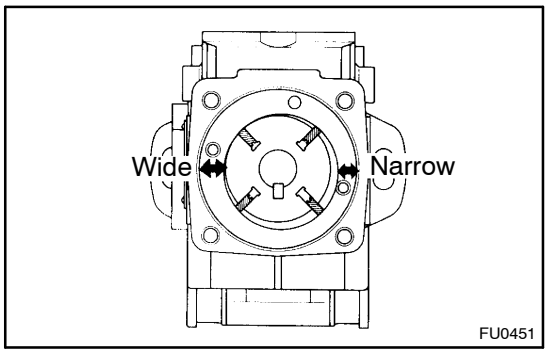

3. INSTALL FUEL FEED PUMP

(a) Install the liner, rotor and 4 blades.

(b) Check that the liner and blades are facing in the correct direction, as shown.

(c) Check that the blades move smoothly.

(d) Align the fuel outlet holes of the cover and liner.

(e) Install the pump cover with the 2 screws.

Torque: 2.9 N·m (29.5 kgf·cm, 25 in.·lbf)

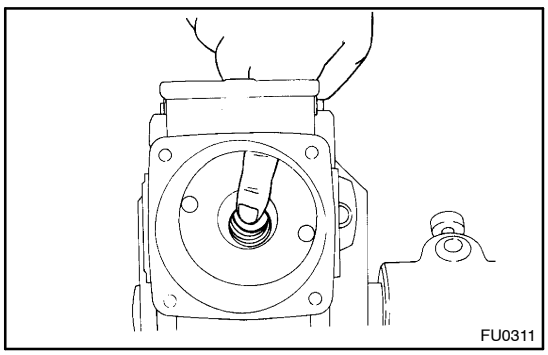

(f) Check that the rotor moves smoothly.

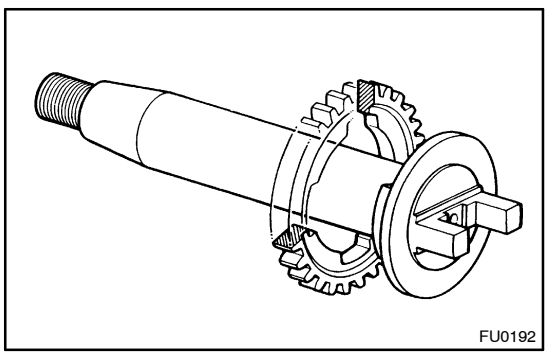

4. INSTALL DRIVE SHAFT

(a) Install the drive gear on the drive shaft as shown.

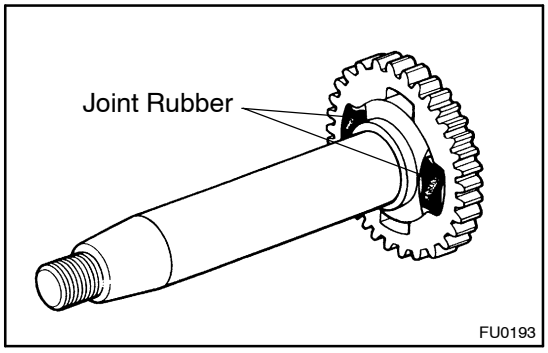

(b) Install 2 new joint rubbers into the drive gear.

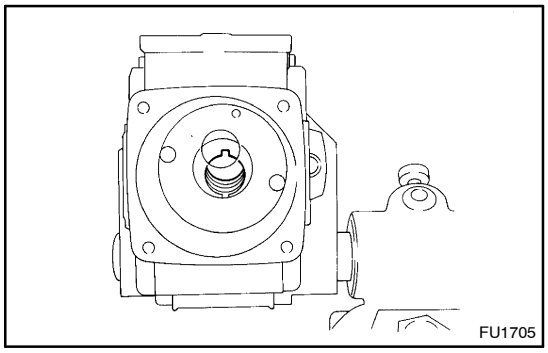

(c) Position the key groove of the feed pump rotor upward.

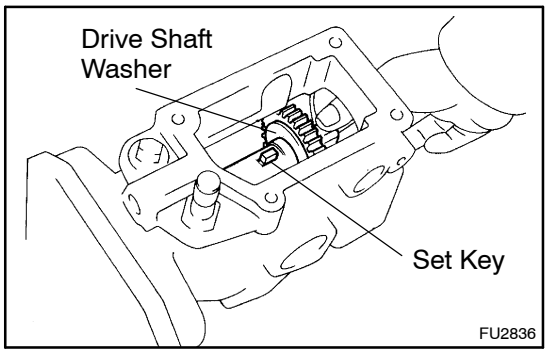

(d) Install the drive shaft washer and set key on the drive shaft and insert the drive shaft assembly into the pump housing.

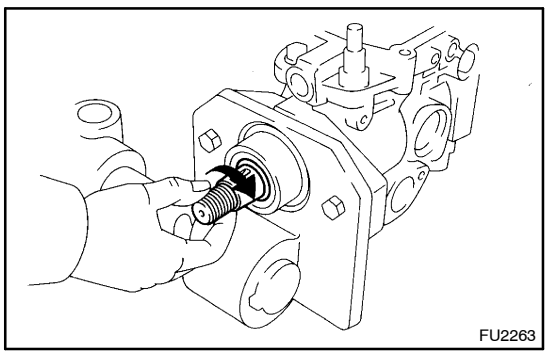

(e) Check that the drive shaft turns without catching.

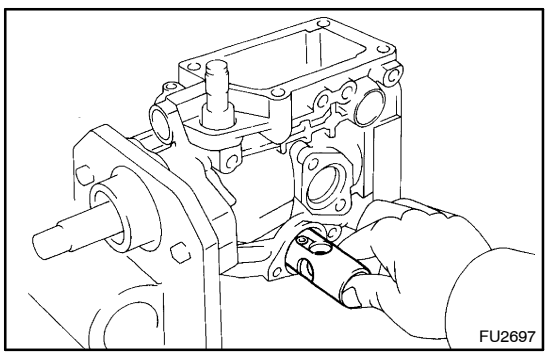

5. INSTALL TIMER PISTON

(a) Apply grease to the timer piston.
(b) Install the sub–piston into the timer piston.
(c) Insert the timer piston into the pump housing.

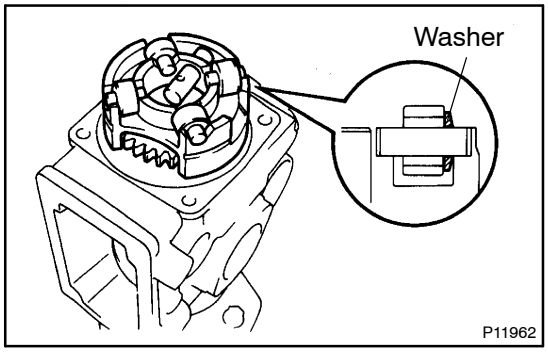

6. INSTALL ROLLER RING

(a) Install the slide pin, 4 rollers and 4 washers on the roller ring.

(b) Check that the roller is facing the flat surface of the washer.

(c) Install the roller ring into the pump housing.

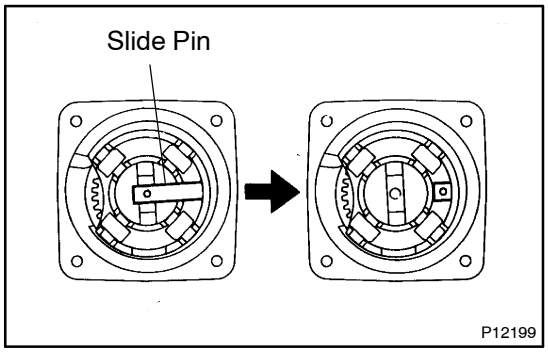

(d) Carefully install the slide pin into the sub–piston.

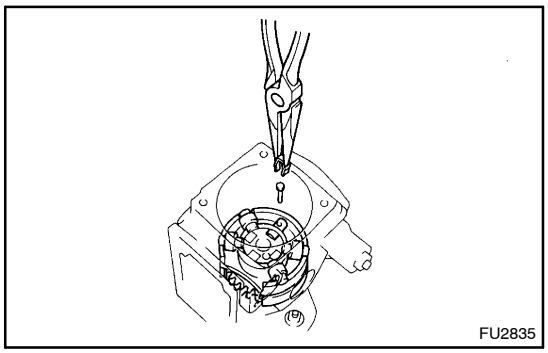

(e) Install the stopper pin and clip.

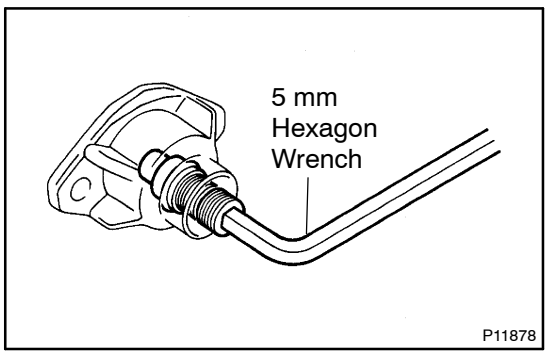

7. INSTALL TIMER SPRING

(a) Install a new O–ring to the timer adjusting screw.

(b) Using a 5 mm hexagon wrench, install the timer adjusting screw to the LH timer cover and temporarily install the nut.

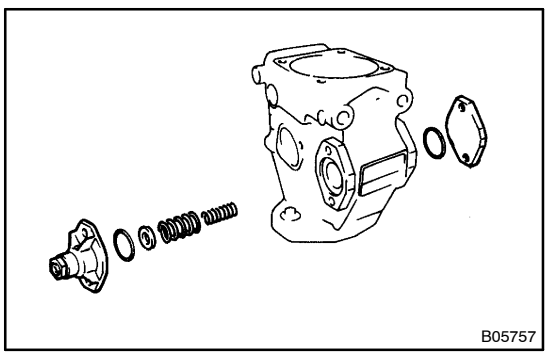

(c) Install the inner spring, outer spring, shim, 2 new O–rings, the RH timer cover and LH timer cover, timer adjusting screw and nut assembly.

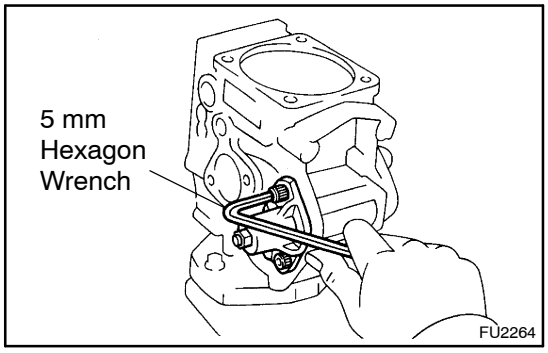

(d) Using a 5 mm hexagon wrench, install the 4 bolts.
Torque: 8.35 N·m (85 kgf·cm, 74 in.·lbf)

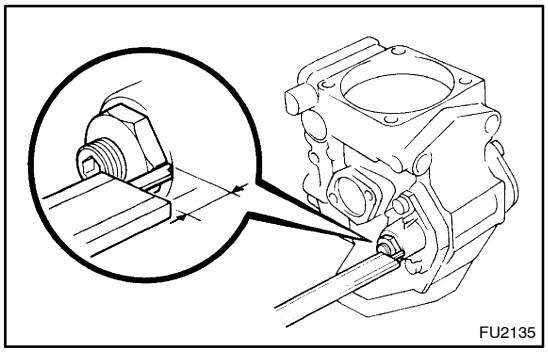

8. PRESET TIMER ADJUSTING SCREW

(a) Using vernier calipers, measure the protrusion of the adjusting screw from the timer cover.
Protrusion: 7.5 – 8.0 mm (0.295 – 0.315 in.)

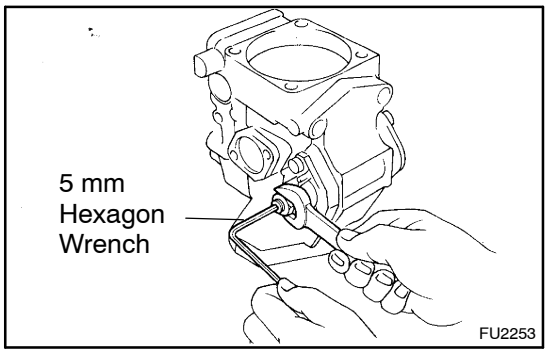

(b) using a 5 mm hexagon wrench, adjust the protrusion of the adjusting screw from the timer cover.

(c) Tighten the nut.
Torque: 14.2 N·m (145 kgf·cm, 11 ft·lbf)

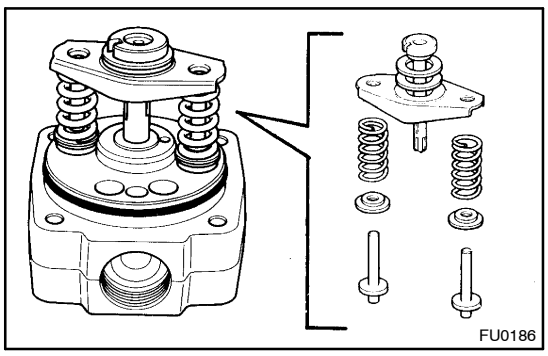

9. ADJUST PLUNGER SPRING SHIM

(a) Install the 2 plunger spring guides, 2 upper spring seats, 2 plunger springs, lower spring seat, upper plunger plate, lower plunger plate and pump plunger to the distributive head:

HINT:
Do not assemble the plunger spring shims at this time

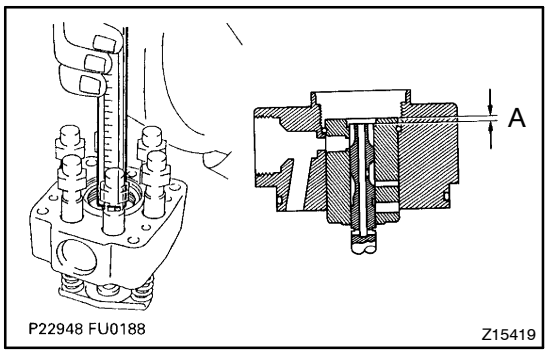

(b) Using vernier calipers, measure clearance A indicated

(c) Determine the plunger spring shim size by using these formula and chart.
1HZ:
New plunger spring shim thickness = 5.9 – A
A ... Measured plunger position
1HD–T:
New plunger spring shim thickness = 5.2 – A
A ... Measured plunger position

Plunger spring shim selection chart:

1HZ:

Measured clearance mm (in.)	Shim thickness mm (in.)
More than 5.4 (0.213)	0.5 (0.020)
5.1 – 5.3 (0.201 – 0.209)	0.8 (0.031)
4.9 – 5.0 (0.193 – 0.197)	1.0 (0.039)
4.7 – 4.8 (0.185 – 0.189)	1.2 (0.047)
4.4 – 4.6 (0.173 – 0.181)	1.5 (0.059)
4.1 – 4.3 (0.161 – 0.169)	1.8 (0.071)
Less than 4.0 (0.157)	2.0 (0.079)

1HD–T:

Measured clearance mm (in.)	Shim thickness mm (in.)
More than 4.7 (0.185)	0.5 (0.020)
4.4 – 4.6 (0.173 – 0.181)	0.8 (0.031)
4.2 – 4.3 (0.165 – 0.169)	1.0 (0.039)
4.0 – 4.1 (0.157 – 0.161)	1.2 (0.047)
3.7 – 3.9 (0.146 – 0.154)	1.5 (0.059)
3.4 – 3.6 (0.134 – 0.142)	1.8 (0.071)
Less than 3.3 (0.130)	2.0 (0.079)

HINT:

- For a measurement between listed sizes, use the next larger size. For example, if thickness is 1.1 mm (0.043 in.) by calculation, use a 1.2 mm (0.047 in.) shim.
- Select 2 shims which have the same thickness.

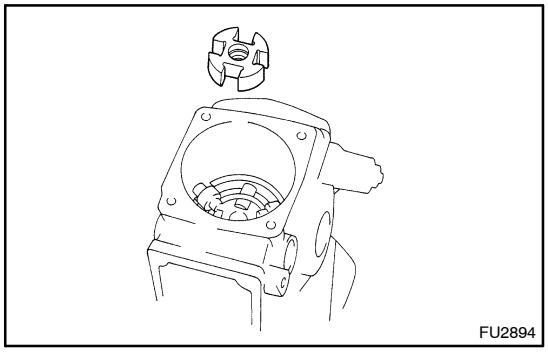

10. INSTALL COUPLING

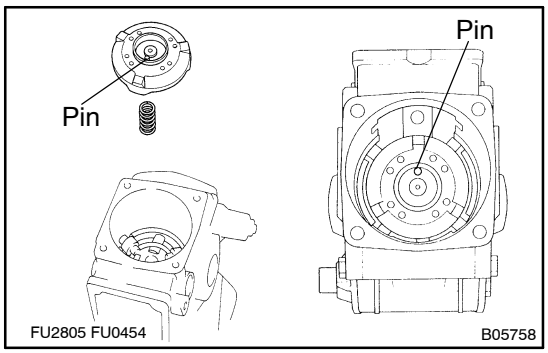

11. INSTALL FACE CAMPLATE

(a) Face the drive shaft with the key groove facing upward.

(b) Install the coupling spring and camplate with the camplate pin facing the governor cover side.

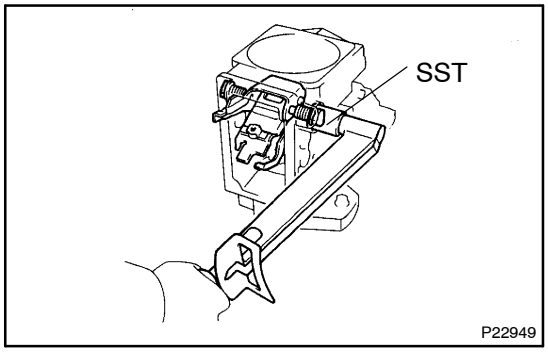

12. INSTALL GOVERNOR LINK

(a) Using SST, install the governor link with 2 new gaskets and the 2 support bolts.
Torque: 14 N·m (140 kgf·cm, 10 ft·lbf)
SST 09260–54012 (09269–54040)

(b) Check that the governor link moves smoothly.

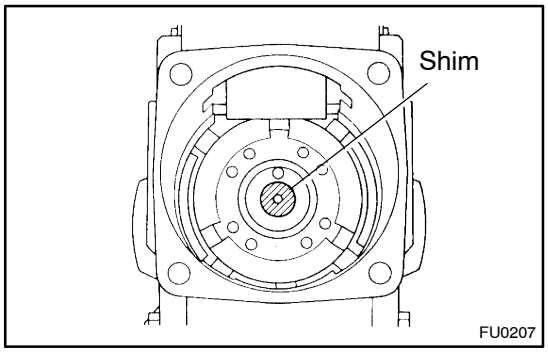

13. INSTALL PUMP PLUNGER

(a) Place the previously used plunger adjusting shim on the center of the camplate.

NOTICE:
Do not apply grease to the shim.

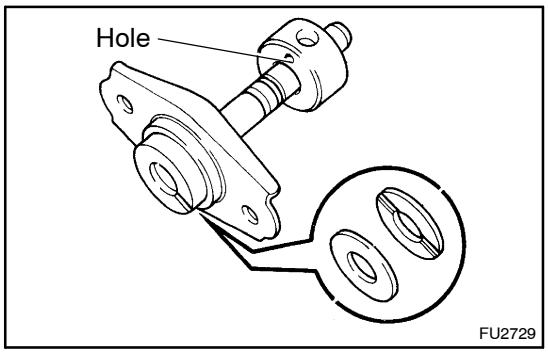

(b) Install the lower plunger plate, upper plunger plate, lower spring seat and spill ring to the pump plunger.

HINT:
Face the spill ring with the hole facing the lower spring seat.

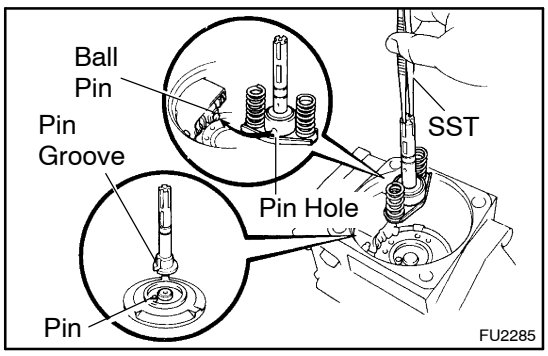

(c) Align the pin groove of the plunger with the pin of the face camplate.

(d) align the ball pin of the governor link with the pin hole of the spill ring.

(e) Using SST, install the pump plunger and 2 plunger springs.
SST 09260–54012 (09269–54030)

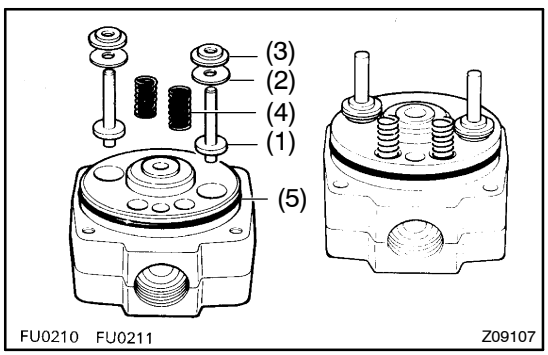

14. INSTALL DISTRIBUTIVE HEAD

(a) Apply grease to these parts and install them to the distributive head.
(1) 2 plunger spring guides
(2) 2 new selected plunger spring shims
(3) 2 upper spring seats
(4) 2 lever support springs
(5) New O–ring

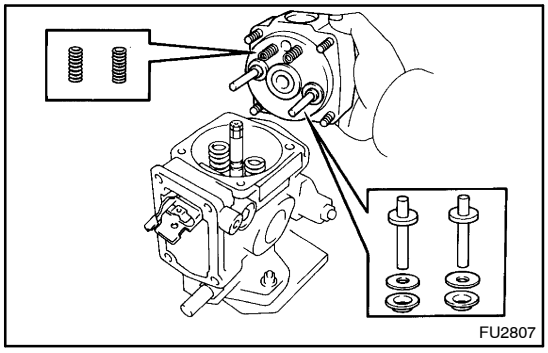

(b) Install the distributive head.

NOTICE:

Be careful not to damage the pump plunger.

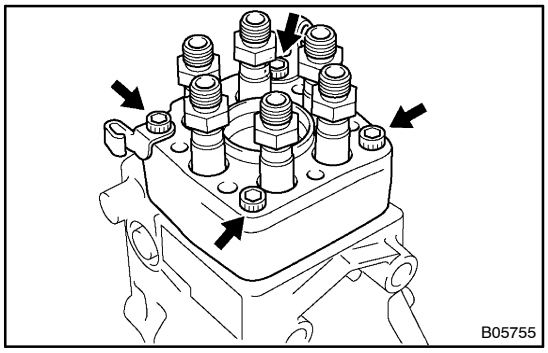

(c) Using a 5 mm hexagon wrench, install the 2 wire clips and 4 bolts.

Torque: 12 N·m (120 kgf·cm, 9 ft·lbf)

HINT:

Use the bolt which is 45 mm (1.77 in.) in length.

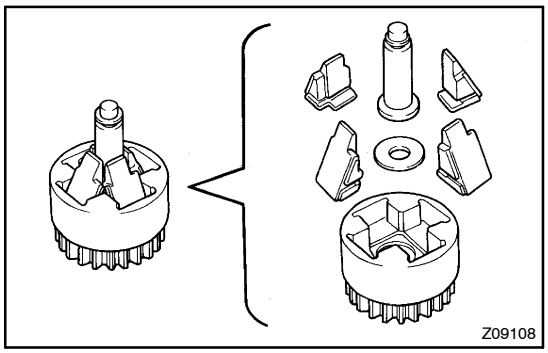

15. INSTALL GOVERNOR SHAFT AND FLYWEIGHT HOLDER

(a) Install the 4 flyweight, No.2 flyweight washer and governor sleeve to the flyweight holder.

HINT:

Replace the 4 flyweights as a set.

(b) Install a new O–ring to the governor shaft.

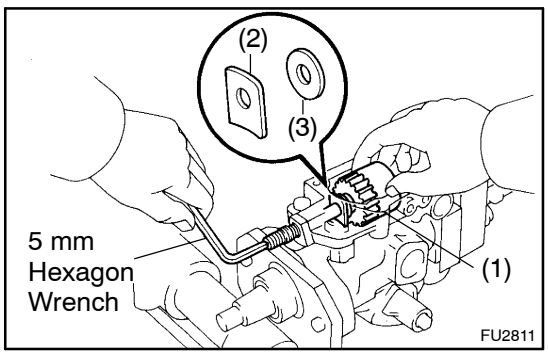

(c) Place the flyweight holder assembly (1) in position, and install the governor gear adjusting washer (2) and No.1 flyweight washer (3) between the flyweight holder and pump housing.

(d) Install the governor shaft through the governor gear adjusting washer, No.1 flyweight washer and flyweight holder assembly.

(e) Using a 5 mm hexagon wrench, turn the governor shaft counterclockwise.

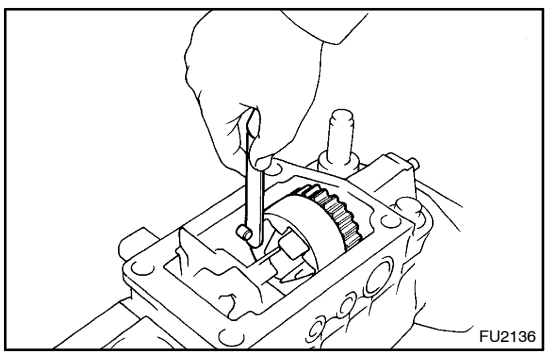

16. CHECK FLYWEIGHT HOLDER THRUST CLEARANCE

Using a thickness gauge, measure the thrust clearance between the housing pin and flyweight holder.

Thrust clearance: 0.15 – 0.35 mm (0.0059 – 0.0138 in.)

If the thrust clearance is not as specified, adjust with a governor gear adjusting washer.

Governor gear adjusting washer thickness:

1.05 mm (0.0413 in.)	1.25 mm (0.0492 in.)	1.45 mm (0.0571 in.)
1.65 mm (0.06500 in.)	1.85 mm(0.0728 in.)	–

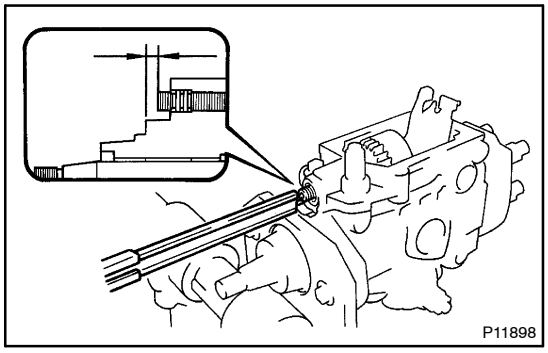

17. ADJUST PROTRUSION OF GOVERNOR SHAFT

(a) Using vernier calipers, measure the protrusion of the governor shaft.

Protrusion: 0.3 – 2.0 mm (0.012 – 0.079 in.)

If the protrusion is not as specified, adjust by turning the governor shaft.

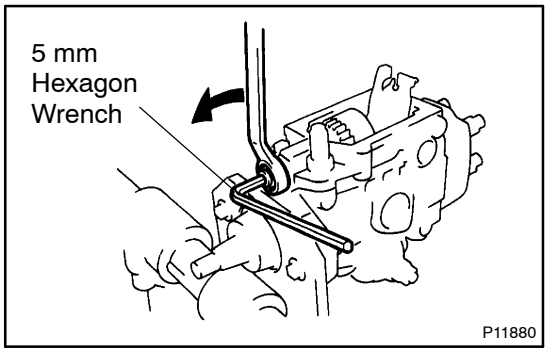

(b) Using a 5 mm hexagon wrench, install and tighten the nut while holding the governor shaft.

Torque: 27 N·m (275 kgf·cm, 20 ft·lbf)

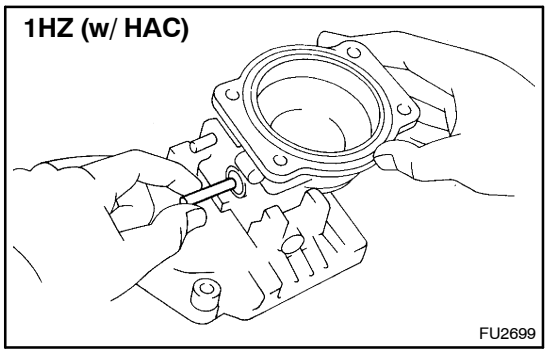

18. 1HZ (w/ HAC): ASSEMBLE HIGH ALTITUDE COMPENSATOR

(a) Install the control lever.

(1) Insert the connecting pin into the governor cover.

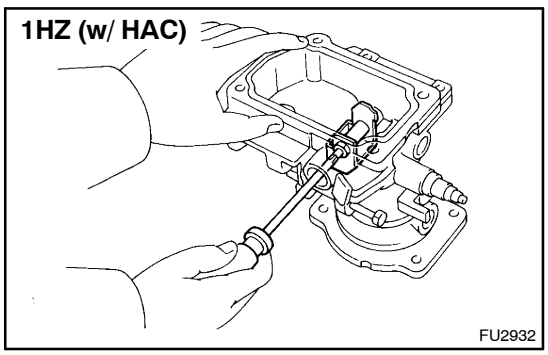

(2) Using a small screwdriver, install the control lever with the support pin.

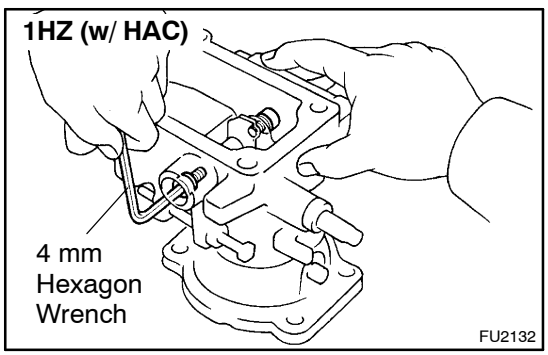

(3) Using a 4 mm hexagon wrench, install 2 new gaskets and the 2 bolts.

Torque: 6.85 N·m (70 kgf·cm, 61 in.·lbf)

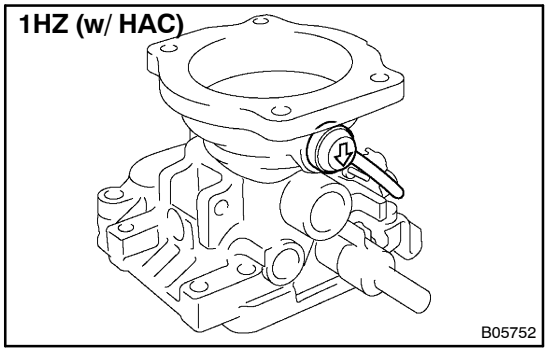

(b) Install the rubber cap facing the arrow downward.

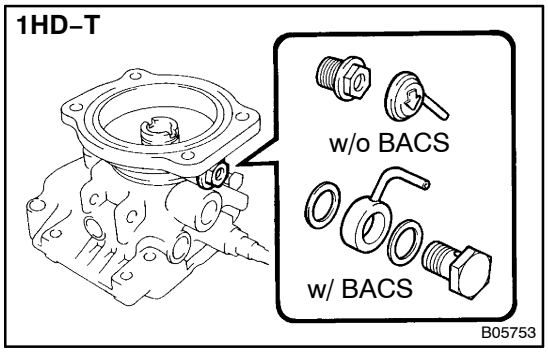

19. 1HD–T:
ASSEMBLE BOOST COMPENSATOR

(a) Install the overflow screw.
(1) w/ BACS:
Install the BACS union and 2 new gaskets with the overflow screw.
Torque: 24.55 N·m (250 kgf·cm, 18 ft·lbf)
(2) w/o BACS:
Install the overflow screw.
Torque: 24.55 N·m (250 kgf·cm, 18 ft·lbf)
(3) w/o BACS:
Install the rubber cap facing the arrow downward.

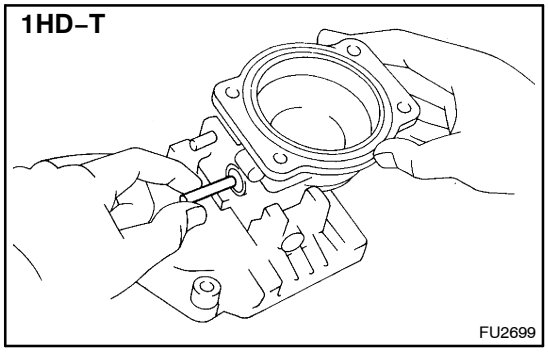

(b) Install the control lever.
(1) Insert the connecting pin into the governor cover.

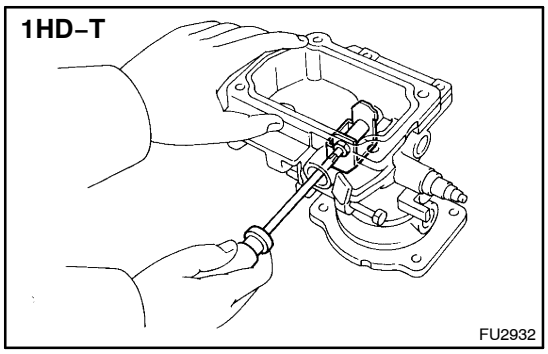

(2) Using a small screwdriver, install the control lever with the support pin.

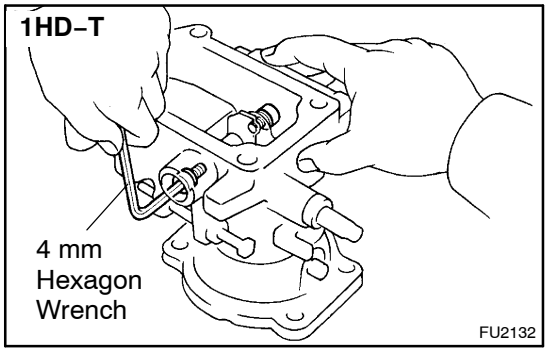

(3) Using a 4 mm hexagon wrench, install 2 new gaskets and the 2 bolts.
Torque: 6.85 N·m (70 kgf·cm, 61 in.·lbf)

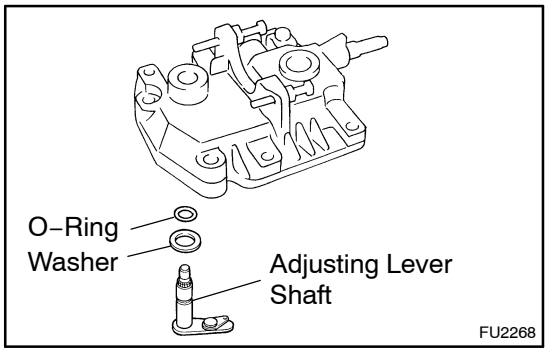

20. INSTALL ADJUSTING LEVER SHAFT TO GOVERNOR SHAFT

(a) Install the washer and a new O–ring to the adjusting lever shaft.
(b) Install the adjusting lever shaft, washer and O–ring assembly to the governor cover.

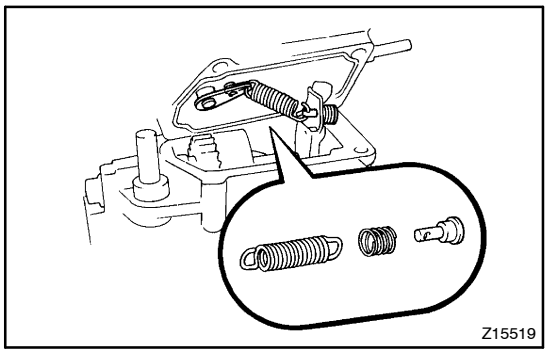

21. INSTALL GOVERNOR COVER

(a) Install the speed control spring to the adjusting shaft.
(b) Install a new gasket to the groove of the governor cover.
(c) Install the damper spring and spring seat, and connect the speed control spring to the spring seat.

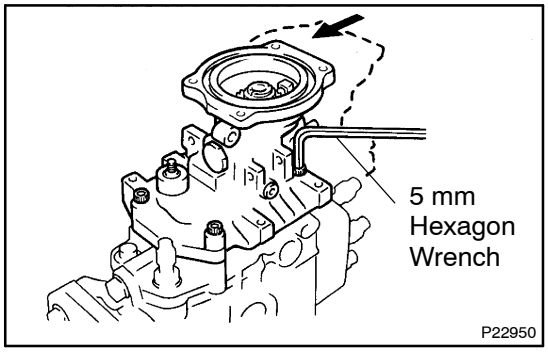

(d) Using a 5 mm hexagon wrench, install the governor cover with the 4 bolts.
Torque: 8.3 N·m (85 kgf·cm, 74 in.·lbf)

HINT:
Use the bolt which is 35 mm (1.38 in.) length.

(e) Using a 5 mm hexagon wrench, install the wire clip to the governor cover with the bolt.
Torque: 8.35 N·m (85 kgf·cm, 74 in.·lbf)

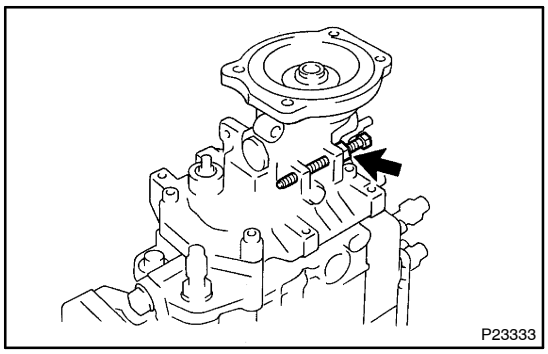

(f) Install the idle speed adjusting screw and lock nut.
Torque: 6.9 N·m (70 kgf·cm, 61 in.·lbf)

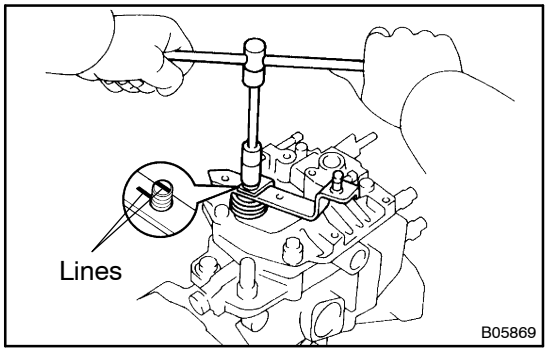

22. INSTALL ADJUSTING LEVER

(a) Place the return spring on the governor cover.
(b) Hook the return spring to the adjusting lever, and turn and place the adjusting lever on the governor shaft.
(c) Align the lines of the adjusting lever shaft and adjusting lever.
(d) Install adjusting lever and spring guide (M/T) with the nut.
Torque: 8.35 N·m (85 kgf·cm, 74 in.·lbf)

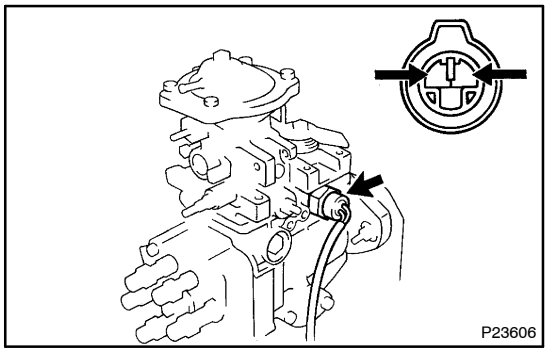

23. INSTALL PICKUP SENSOR

(a) Connect the sensor lead wires to the connector.
(b) Install a new O–ring and pickup sensor.
Torque: 20.6 N·m (210 kgf·cm, 15 ft·lbf)

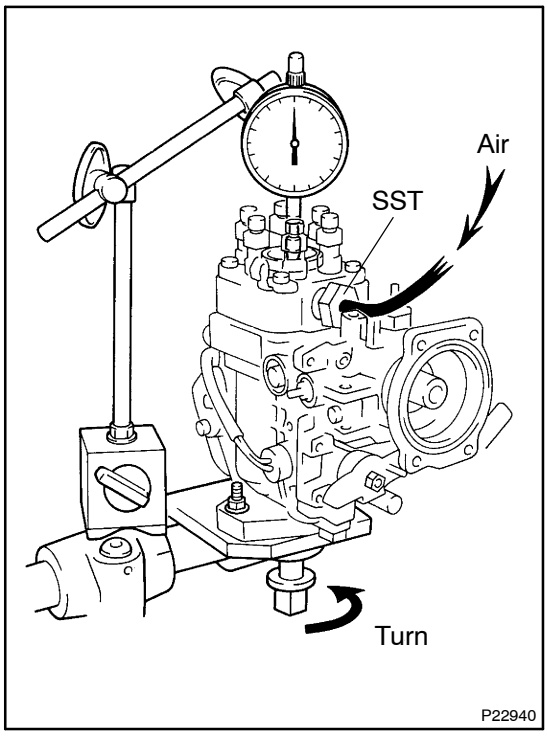

24. ADJUST PLUNGER PRE–STROKE

(a) Install SST to the fuel cut solenoid installation screw section.
SST 09275–17010
(b) Set the dial indicator so that the tip of the dial indicator push rod touches the upper surface of the plunger.
(c) Install the set nut to the drive shaft.
(d) Rotate the drive shaft, set the plunger to BDC and set the scale on the dial indicator to 0 mm (0 in.).
(e) Apply a few drops of light oil (diesel fuel) to the top surface of the plunger, and when 49 kpa (0.1 kgf/cm^2, 1.4 psi) of air is applied to SST, bubbles appear on the upper surface of the plunger.
(f) Slowly rotate the drive shaft in the pump rotation direction (clockwise) and read the dial indicator when the bubbles on the top of the plunger disappear.
Pre–stroke:
1HZ: 0.2 mm (0.0079 in.)
1HD–T: 0.25 mm (0.0098 in.)

If the pre–stroke is not as specified, replace the plunger adjusting shim under the plunger with a different sized shim.
HINT:

- Shims are available in 131 sized in increments 0.01 mm(0.004 in.), from 1.90 mm (0.0748 in.) to 3.20 mm (0.1260 in.).
- If the shim is made thicker, the pre–stroke is decreased.

(g) Remove the SST from the fuel cut solenoid installation screw section.
(h) Remove the set nut from the drive shaft.

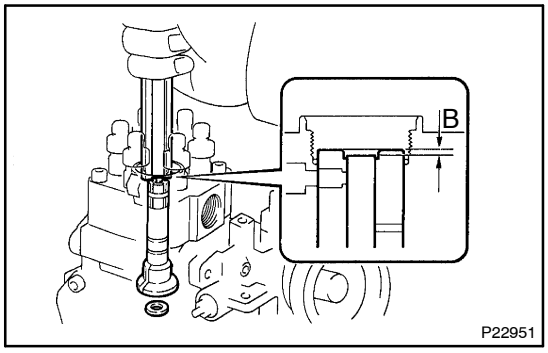

(i) After completing the pre–stroke adjustment, check that dimension B is within the specifications.
Dimension B:
1HZ: 3.1 – 3.5 mm (0.122 – 0.138 in.)
1HD–T: 2.8 – 3.2 mm (0.110 – 0.126 in.)
If dimension B is not within the specification, replace the distributor head.

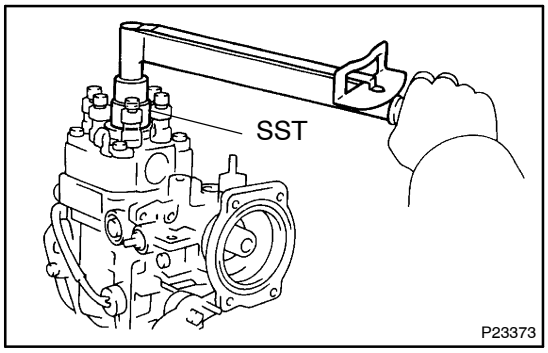

25. INSTALL DISTRIBUTIVE HEAD PLUG
(a) Install a new O–ring to the head plug.
(b) Using SST, install the head plug.
SST 09260–54012 (09262–54010)
Torque:
1HZ: 69 N·m (700 kgf·cm, 51 ft·lbf)
1HD–T: 88 N·m (900 kgf·cm, 65 ft·lbf)

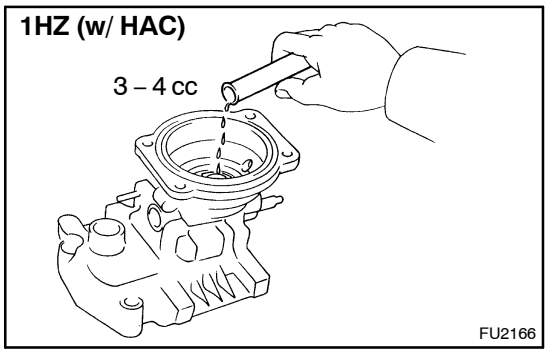

26. 1HZ (w/ HAC):
ASSEMBLE HIGH ALTITUDE COMPENSATOR
(a) Install the pneumatic bellows.
(1) Insert 3 – 4 cc (0.18 – 0.24 cu in.) of engine oil into the bushing hole.

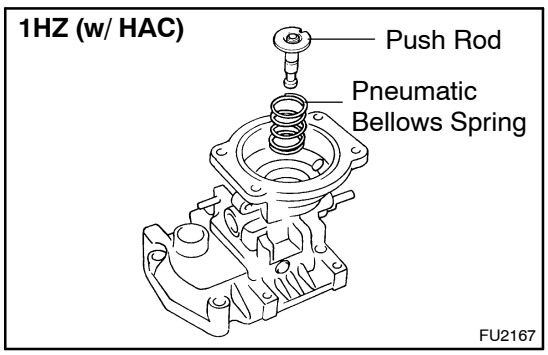

(2) Place the pneumatic bellows spring and push rod on the governor cover.

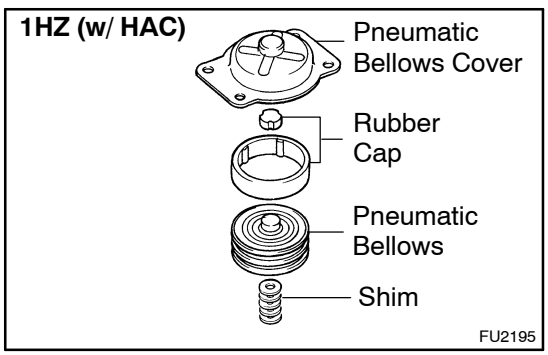

(3) Install the 2 rubber caps, pneumatic belows and shims to the pneumatic bellows cover.

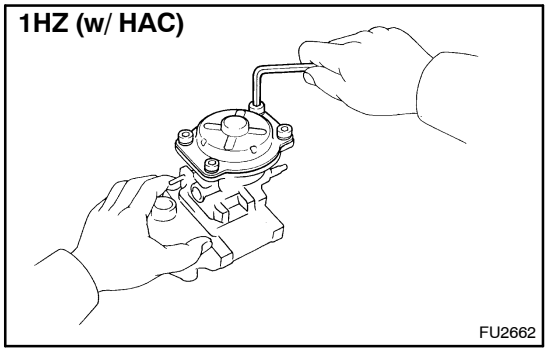

(4) Install a new gasket and the pneumatic bellows and bellows cover assembly to the governor cover.
(5) Using a 5 mm hexagon wrench, install the 4 bolts.
Torque: 7.35 N·m (75 kgf·cm, 65 in.·lbf)

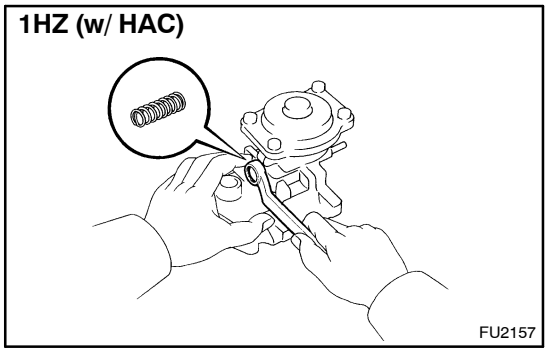

(b) Install the lever control spring.
Install the lever spring with a new gasket and the bolt.
Torque: 11.3 N·m (115 kgf·cm, 8 ft·lbf)

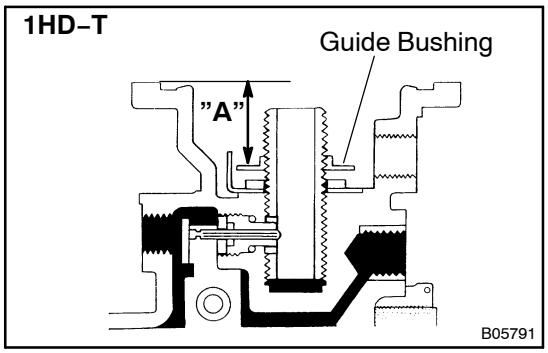

27. 1HD–T:
ASSEMBLE BOOST COMPENSATOR

(a) Install the guide bushing.
Install and adjust the guide bushing to the dimension "A" as shown in the illustration.

Item	Dimension "A"
Philippine	16.25 – 16.35 mm (0.640 – 0.644 in.)
Others (w/ BACS)	18.65 – 18.75 mm (0.734 – 0.738 in.)
Others (w/o BACS)	17.95 – 18.05 mm (0.707 – 0.711 in.)

(b) Install the boost compensator diaphragm.
(1) Apply sealant to the push rod threads.
Sealant:
Part No.08833–00080, THREE BOND 1344, LOCTITE 242 or equivalent

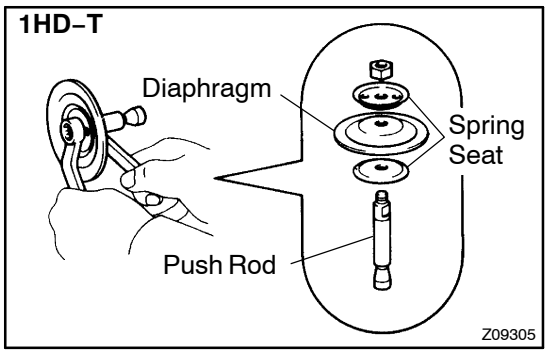

(2) Install the diaphragm and 2 spring seats to the push rod with the nut.
Torque: 7.35 N·m (75 kgf·cm, 65 in.·lbf)

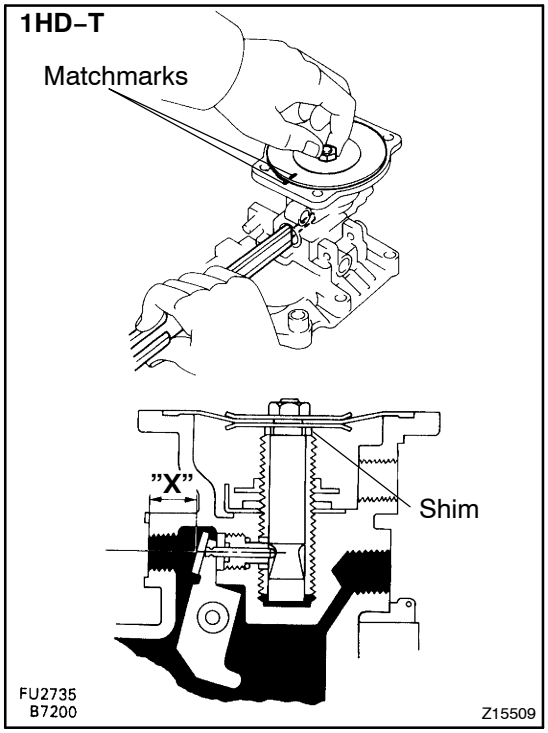

(3) Adjust the installation direction of boost compensator diaphragm assembly.
- Install the shim and diaphragm assembly.

HINT:
Do not assemble the spring.
- Using vernier calipers, while pushing on the diaphragm assembly dimension "X" with vernier calipers as shown.

Item	Dimension "X"
Philippine	7.9 – 8.1 mm (0.311 – 0.319 in.)
Others (w/ BACS)	8.35 – 8.55 mm (0.329 – 0.337 in.)
Others (w/o BACS)	8.1 – 8.3 mm (0.319 – 0.327 in.)

HINT:
Measure at the center of the hole.
- Place matchmarks on the diaphragm assembly and governor cover.
- Remove the diaphragm assembly.

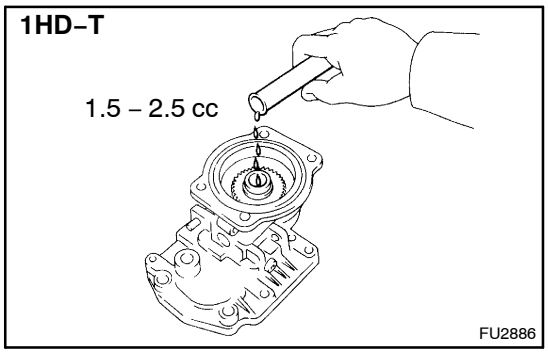

(4) Insert 1.5 – 2.5 cc (0.09 – 0.15 cu in.) of engine oil into the bushing hole.

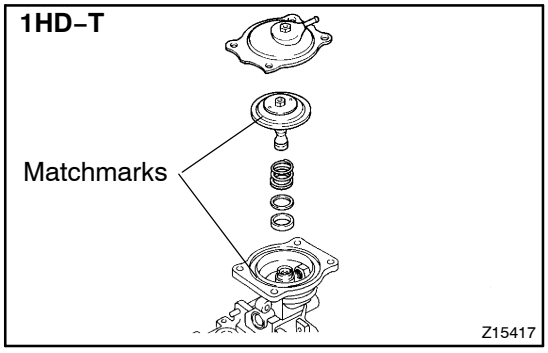

(5) Install the boost compensator shims, spring, diaphragm assembly and diaphragm cover to the governor cover.

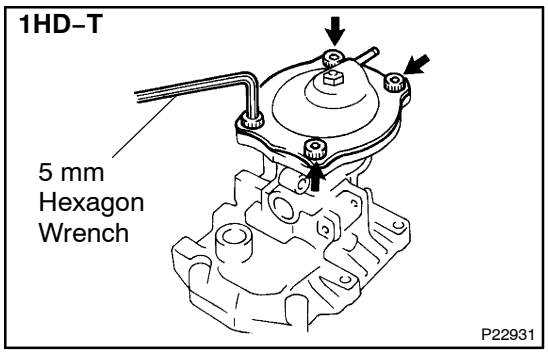

(6) Using a 5 mm hexagon wrench, install the diaphragm cover with the 4 bolts.

Torque: 7.35 N·m (75 kgf·cm, 65 in.·lbf)

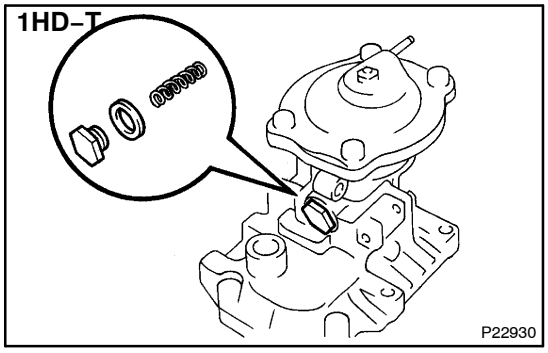

(c) Install the lever control spring.
Install the lever control spring with a new gasket and the bolts.
Torque: 11.3 N·m (115 kgf·cm, 8 ft·lbf)

28. INSTALL INJECTION PUMP STAY
Torque: 8.35 N·m (85 kgf·cm, 74 in.·lbf)

29. INSTALL FUEL CUT SOLENOID

(a) Install a new O–ring on the fuel cut solenoid.

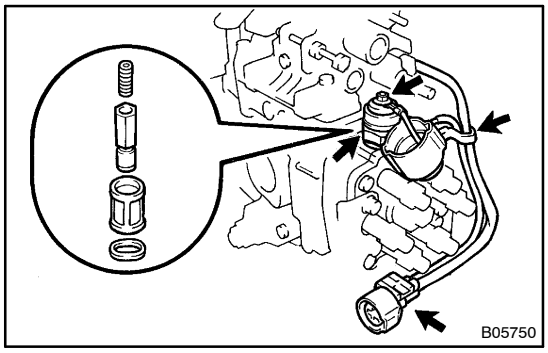

(b) Install the wave washer, strainer, valve, spring and fuel cut solenoid.
Torque: 22 N·m (225 kgf·cm, 16 ft·lbf)

(c) w/o Fuel Cut Valve Control Unit:
Install the lead wire to the fuel cut solenoid with the nut.
Torque: 1.7 N·m (17 kgf·cm, 15 ft·lbf)

(d) w/o Fuel Cut Valve Control Unit::
Install the dust cover to the fuel cut solenoid.

(e) w/o Fuel Cut Valve Control Unit:
Install the wire harness to the wire clip.

(f) w/o Fuel Cut Valve Control Unit:
Install the lead wire connector to the bracket.

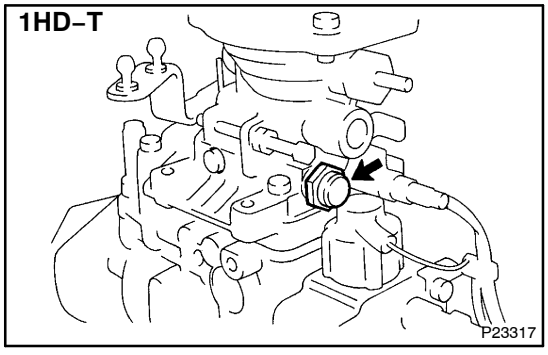

30. 1HD–T:
INSTALL CAP

(a) w/o Fuel Cut Valve Control Unit:
Install a new gasket and the cap.
Torque: 11 N·m (115 kgf·cm, 8 ft·lbf)

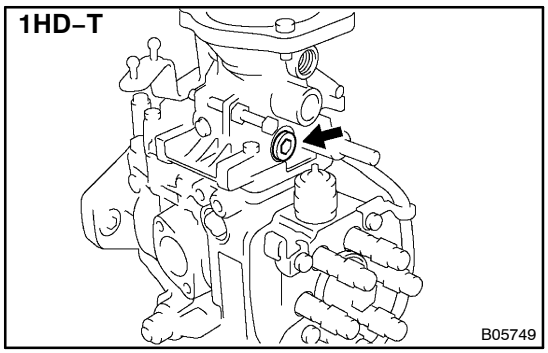

(b) w/ Fuel Cut Valve Control Unit:
Using a 6 mm hexagon wrench Install a new gasket and the cap.

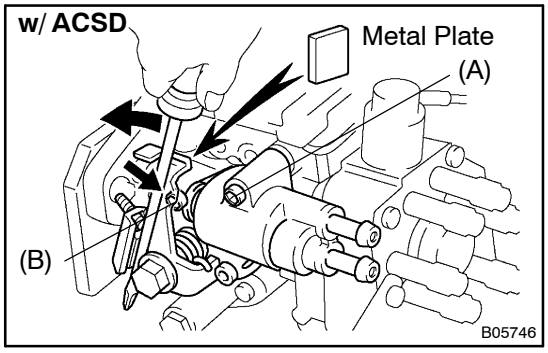

31. w/ ACSD:
INSTALL THERMO WAX

(a) Using a screwdriver, turn the cold starting lever counterclockwise approx. 20°.

(b) Put a metal plate (thickness of 3.5 – 7.5 mm (0.183 – 0.295 in.)) between the cold starting lever and thermo wax plunger.

(c) Install a new O–ring to the pump body.

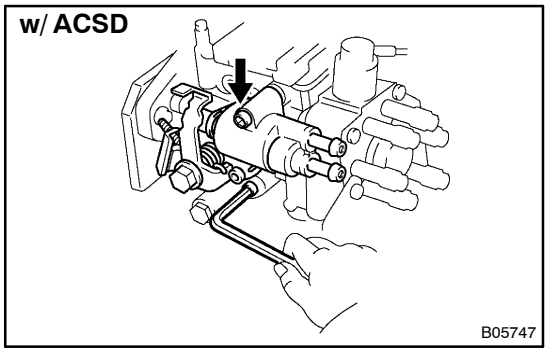

(d) Using a 5 mm hexagon wrench, temporality install the thermo wax with the 2 bolts.

(e) Using a screwdriver, turn the cold starting lever counterclockwise.

(f) Using a 5 mm hexagon wrench, install the bolt (B), and removal the bolts (A).
Torque: 8.35 N·m (85 kgf·cm, 74 in.·lbf)

(g) Using a 5 mm hexagon wrench, tighten the bolt.
Torque: 8.35 N·m (85 kgf·cm, 74 in.·lbf)

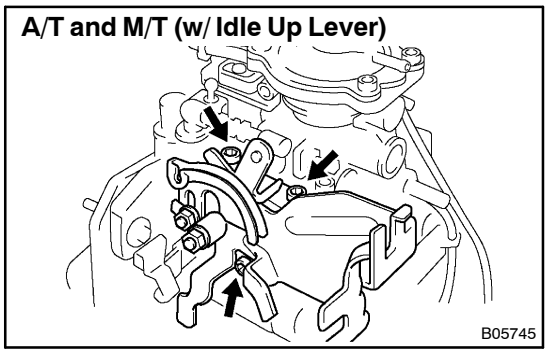

32. A/T and M/T (w/ Idle Up Lever)
INSTALL IDLE–UP LEVER

(a) Using a 5 mm hexagon wrench, install the spacer (w/o ACSD) idle–up lever with the 3 bolts.
Torque:
Short bolt: 8.35 N·m (85 kgf·cm, 74 in.·lbf)
Long bolt: 11.75 N·m (120 kgf·cm, 9 ft·lbf)

(b) A/T:
Connect the idle up link.

33. REMOVE INJECTION PUMP FROM SST (STAND)
SST 09241–76022, 09245–54010

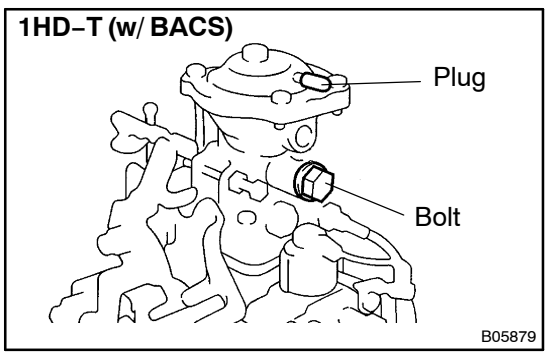

34. PERFORM AIR TIGHT TEST

(a) 1HD–T (w/ BACS):
Install a bolt and gasket to the overflow port.

(b) 1HD–T:
Install the plug to the port of the boost compensator.

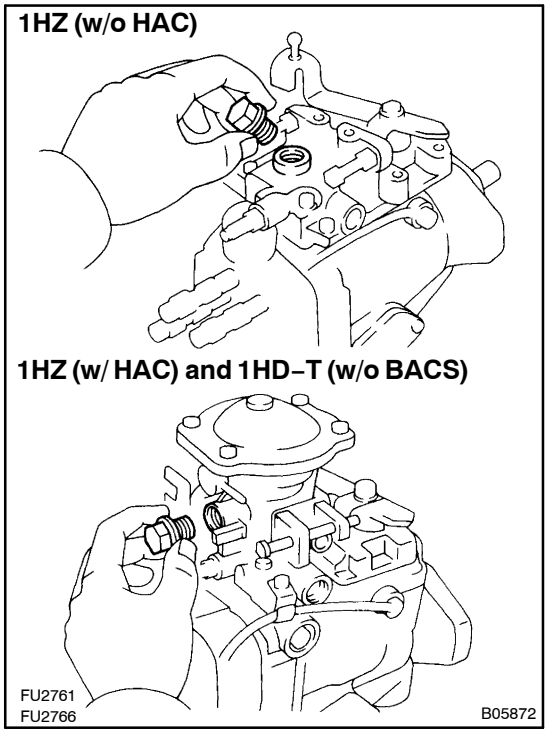

(c) w/o BACS:
Install a bolt to the overflow port.

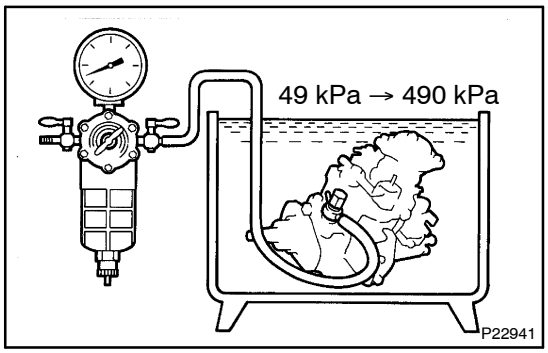

(d) Connect an air hose to the fuel inlet pipe and place the injection pump into diesel fuel.
(e) Apply 49 kPa (0.5 kgf/cm^2, 7 psi) of pressure and confirm that there are no leaks.
(f) Next check that there are no leaks with 490 kPa (5.0 kgf/cm^2, 71 psi) of pressure applied.

35. INSTALL INJECTION PUMP TO SST (STAND)
SST 09241–76022, 09245–54011

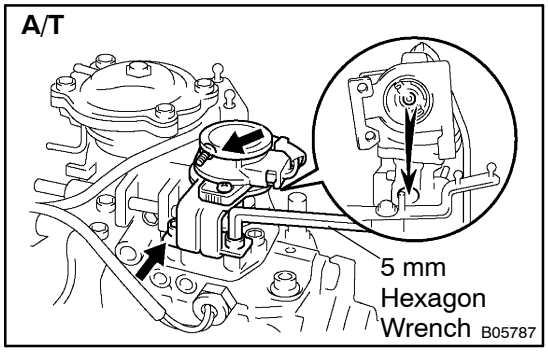

36. A/T:
INSTALL THROTTLE POSITION SENSOR AND BRACKET
(a) Attach the portions of the throttle position sensor and adjusting lever.
(b) Using a 5 mm hexagon wrench, install the throttle position sensor with the 3 bolts.

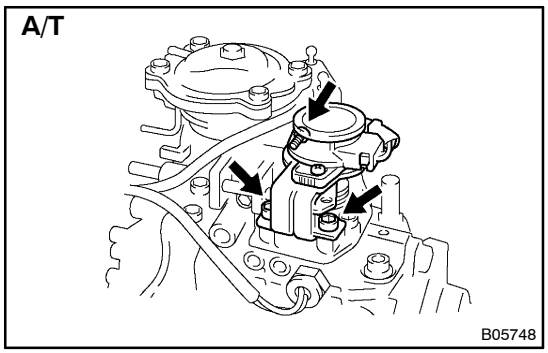

(c) Loosen the 2 screws holding the throttle position sensor to the bracket.

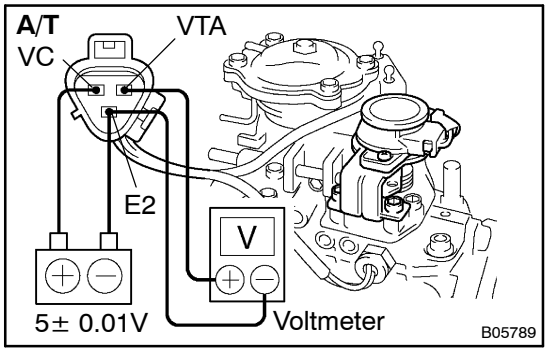

(d) Apply 5 ± 0.01 V across terminals VC and E2.
(e) Connect the tester probes of a voltmeter to terminals VTA and E2 of the throttle position sensor.
(f) Secure the adjusting lever fully on the maximum speed side so that its output will be 0.6 ± 0.025 V
(g) tighten the 2 screws holding the throttle position sensor to the bracket.

37. SEAL PARTS

(a) Seal the full load set screw with new cap seal.
(b) Seal the maximum speed adjusting screw with new lead seal.

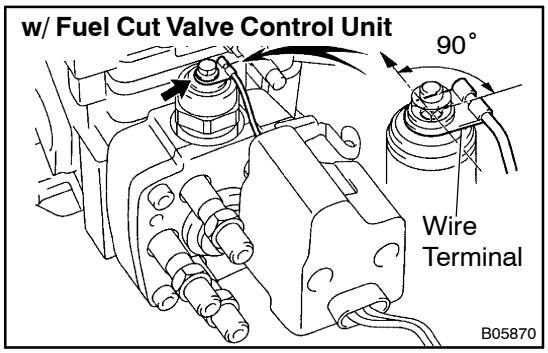

38. w/ Fuel Cut Valve Control Unit:
INSTALL FUEL CUT VALVE CONTROL UNIT

(a) Install the lead wire of the fuel cut valve control unit to the fuel cut solenoid terminal with the nut.

NOTICE:
Be careful of the wire terminal installation direction.

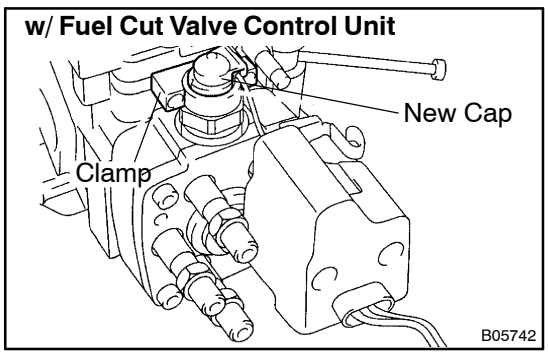

(b) Install a new cap to the fuel cut solenoid terminal.
(c) Place the clamp in position as shown in the illustration.

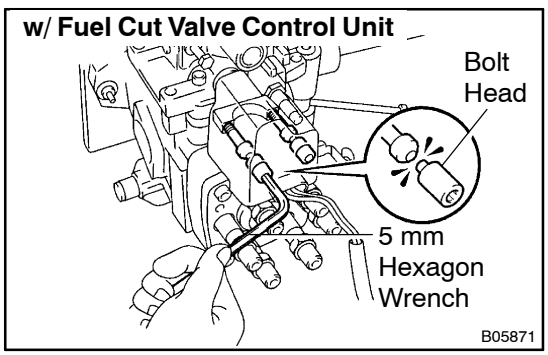

(d) Attach the fuel cut valve control unit to the fuel cut solenoid.
(e) Using 5 mm hexagon wrench, temporarily tighten the 2 new bolts.

NOTICE:
Temporarily tighten the bolts while ensuring that the control unit is being placed securely.

(f) Alternately tighten the 2 bolts until the bolt heads break off.

w/ Fuel Cut Valve Control Unit

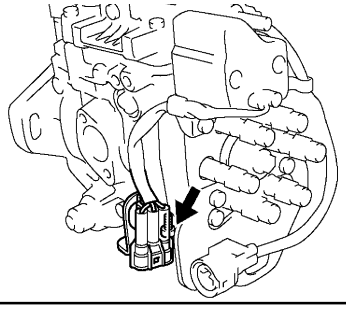

B05738

(g) Using a 8 mm hexagon wrench, install the connector bracket with the bolt.

(h) Connect the connector and wire.

1HZ (w/o HAC)

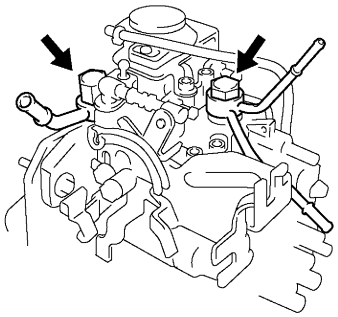

Others

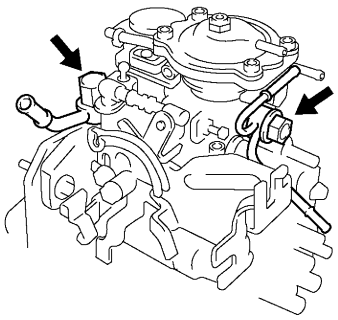

B05744

39. INSTALL FUEL PIPES

(a) Install the nozzle leakage pipe No.2 and 2 new gaskets with the union bolt.

Torque: 22.1 N·m (225 kgf·cm, 16 ft·lbf)

(b) Install the fuel inlet pipe and 2 new gaskets with the cap nut.

Torque: 24.55 N·m (250 kgf·cm, 18 ft·lbf)

40. w/ A/C:
INSTALL IDLE–UP ACTUATOR

Torque: 9.35 N·m (95 kgf·cm, 83 in.·lbf)

41. REMOVE INJECTION PUMP FROM SST (STAND)

SST 09241–76022, 09245–54011

42. INSTALL SET KEY OF INJECTION PUMP DRIVE PULLEY ON DRIVE SHAFT

43. REMOVE INJECTION PUMP FROM SST (STAND)

SST 09241–76022, 09245–54010