INJECTION PUMP (1HD–FTE)

FU05I–01

ON–VEHICLE INSPECTION

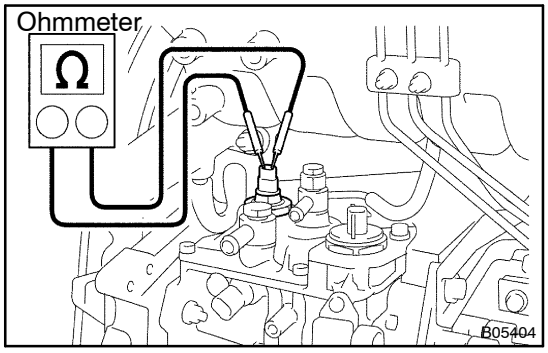

1. INSPECT ENGINE SPEED SENSOR RESISTANCE

(a) Disconnect the sensor connector.

(b) Using an ohmmeter, measure the resistance between the terminals.

Resistance: 205 – 255 Ω at 20°C (68°F)

If the resistance is not as specified, replace the injection pump.

(c) Reconnect the sensor connector.

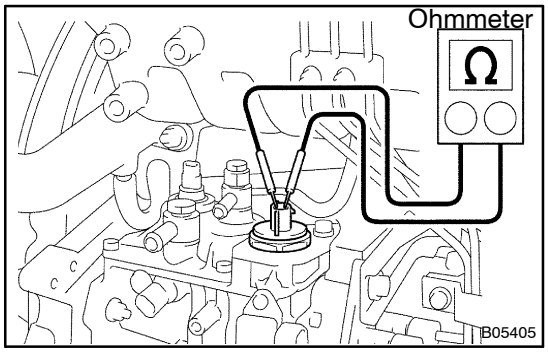

2. INSPECT SPILL CONTROL VALVE RESISTANCE

(a) Disconnect the valve connector.

(b) Using an ohmmeter, measure the resistance between the terminals.

Resistance: 1 – 2 Ω at 20°C (68°F)

If the resistance is not as specified, replace the injection pump.

(c) Reconnect the valve connector.

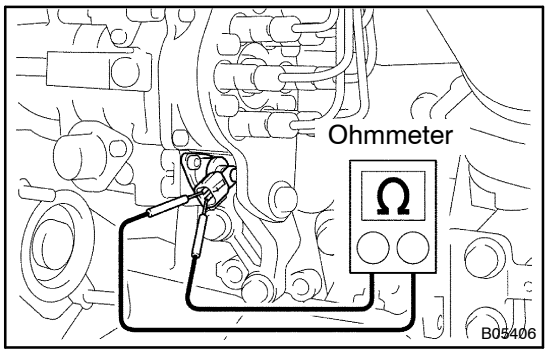

3. INSPECT TIMING CONTROL VALVE RESISTANCE

(a) Disconnect the valve connector.

(b) Using an ohmmeter, measure the resistance between terminals.

Resistance: 10 – 14 Ω at 20°C (68°F)

If the resistance is not as specified, replace the injection pump.

(c) Reconnect the valve connector.

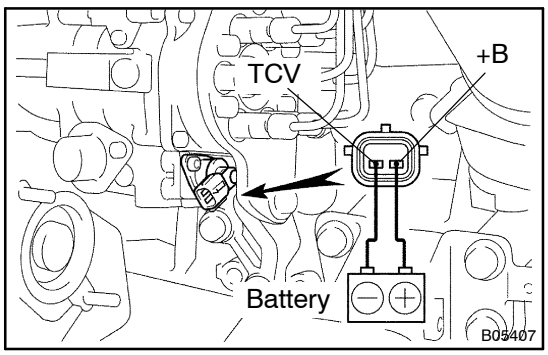

4. INSPECT TIMING CONTROL VALVE OPERATION

(a) Disconnect the valve connector.

(b) Connect the battery positive (+) terminal to the valve terminal +B.

(c) Connect the battery negative (–) terminal to the valve terminal TCV.

(d) Check that the solenoid makes a ”clicks” sound.

If operation is not as specified, replace the injection pump.

NOTICE:

- **Do not apply voltage for more than 30 seconds to avoid burning out the solenoid.**
- **If repeating this step, wait until the solenoid cools down enough that it can be touched by hand.**

(e) Reconnect the valve connector.

5. INSPECT FUEL TEMPERATURE SENSOR

(See page ED–6)