FU05K–01

REMOVAL

1. **REMOVE INTAKE PIPE (See page EM–77)**
2. **REMOVE CYLINDER HEAD COVERS (See page EM–77)**
3. **REMOVE TIMING BELT (See page EM–77)**
4. **REMOVE NO.2 CAMSHAFT TIMING PULLEY (See page EM–27)**
5. **REMOVE INJECTION PIPES (See page FU–33)**
6. **DISCONNECT FUEL RETURN HOSE**
7. **DISCONNECT CONNECTORS**

Disconnect these connectors:

- Engine speed sensor connector
- Spill control valve connector
- Correction resister connector
- Timing control valve connector
- Fuel temperature sensor connector

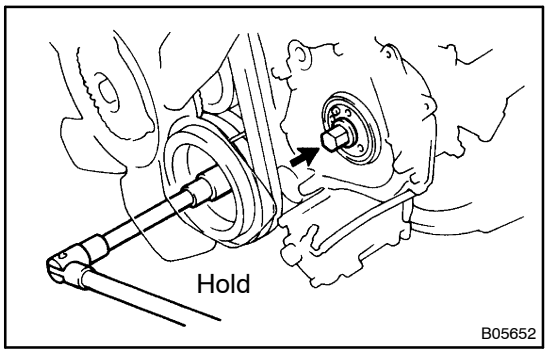

8. **REMOVE INJECTION PUMP**

(a) Hold the crankshaft pulley, and remove the injection pump drive gear set nut.

NOTICE:

Do not turn the crankshaft pulley. The valve heads will hit against the piston top.

(b) Remove the O–ring from the injection pump drive gear.

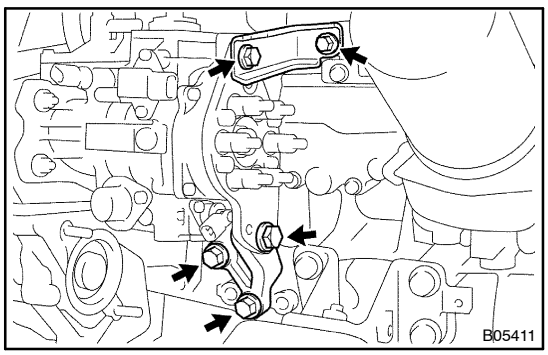

(c) Remove the 2 bolts and pump stay bracket.
(d) Remove the 3 bolts and injection pump stay.
(e) Remove the No.3 cylinder block insulator.

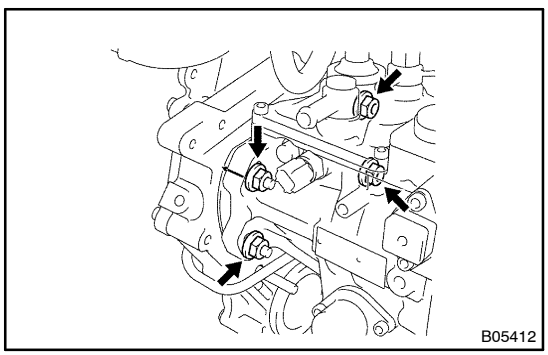

(f) Before removing the injection pump, check if the period lines are aligned.
If not, place new matchmarks for reinstallation.
(g) Remove the 4 nuts holding the injection pump to the timing gear case.

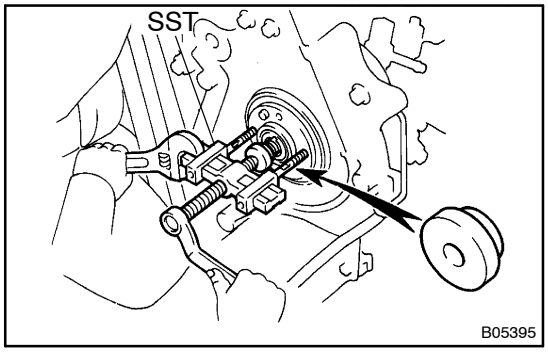

(h) Using SST, remove the injection pump.
SST 09950–40011 (09957–04010),
09950–50010 (09951–05010, 09952–05010,
09953–05020, 09954–05020)

NOTICE:

- **Tighten the 2 bolts more than 8 mm (0.31 in.).**
- **Set SST so that it is balanced.**

(i) Remove the No.1 cylinder block insulator and No.1 injection pump insulator.

(j) Remove the O–ring from the injection pump.