FU05L–01

DISASSEMBLY

1. MOUNTING PUMP ASSEMBLY TO SST (STAND)
(See page FU–53)
SST 09241–76022, 09245–68010

2. REMOVE SET KEY OF DRIVE PULLEY FROM DRIVE SHAFT

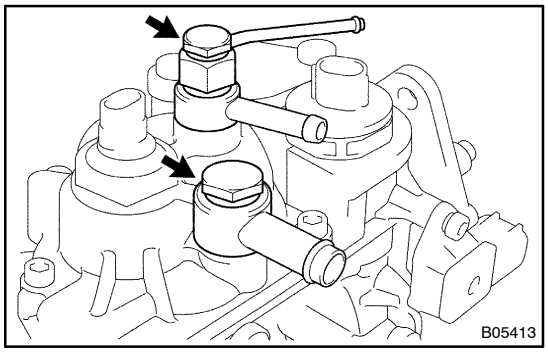

3. REMOVE FUEL PIPES
(a) Remove the over flow screw, fuel outlet pipe and 2 gaskets.
(b) Remove the union bolt, fuel inlet pipe and 2 gaskets.

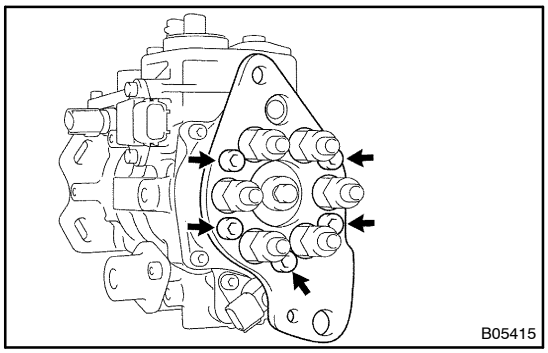

4. REMOVE INJECTION PUMP STAY
Using a 6 mm hexagon wrench, remove the 5 bolts and injection pump stay.

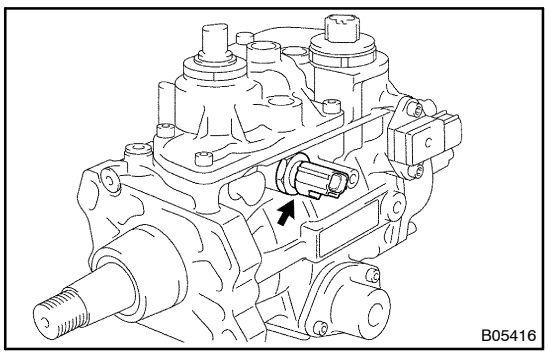

5. REMOVE FUEL TEMPERATURE SENSOR