FU05M–01

REASSEMBLY

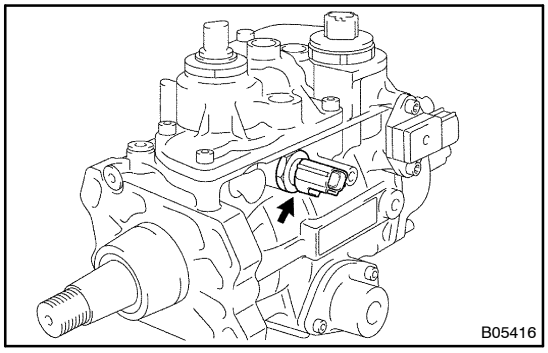

1. INSTALL FUEL TEMPERATURE SENSOR

Install a new O–ring and fuel temperature sensor.

Torque: 22.1 N·m (225 kgf·cm, 16 ft·lbf)

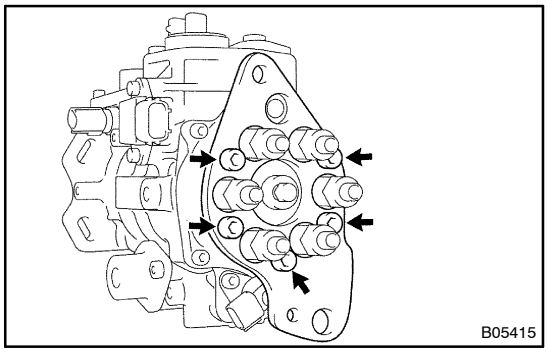

2. INSTALL INJECTION PUMP STAY

Using a 6 mm hexagon wrench, install the injection pump stay with the 5 bolts.

Torque: 19.6 N·m (200 kgf·cm, 14 ft·lbf)

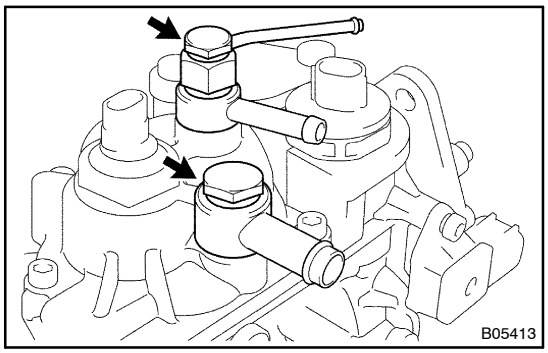

3. INSTALL FUEL PIPES

(a) Install the fuel inlet pipe and 2 new gaskets with the union bolt.

Torque: 24.5 N·m (250 kgf·cm,18 ft·lbf)

(b) Install the fuel outlet pipe and 2 new gaskets with the over flow screw.

Torque: 22.1 N·m (225 kgf·cm, 16 ft·lbf)

4. INSTALL SET KEY OF INJECTION PUMP DRIVE PULLEY ON DRIVE SHAFT

5. REMOVE INJECTION PUMP FROM SST (STAND)

SST 09241–76022, 09245–68010