FU05N–01

INSTALLATION

1. INSTALL INJECTION PUMP

(a) Install a new O–ring to the pump.

(b) Apply a light coat of engine oil on the O–ring.

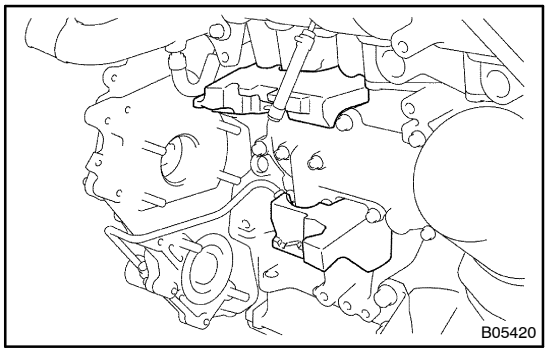

(c) Place the No.1 injection pump insulator and No.1 cylinder block insulator to the cylinder block.

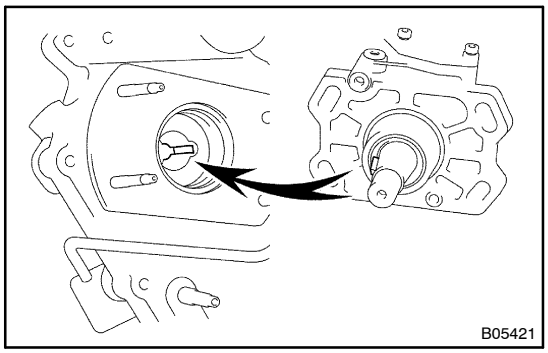

(d) Align the set key on the drive shaft and groove of the injection pump drive gear.

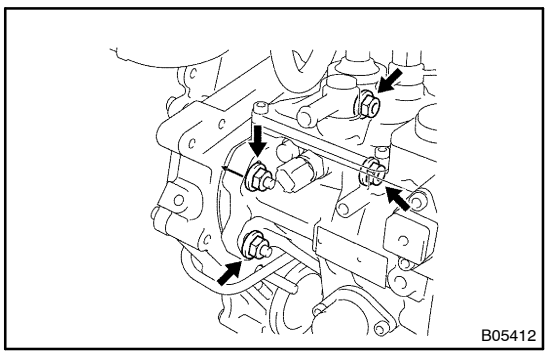

(e) Align the period lines (or matchmarks) of the injection pump and timing belt case.

(f) Install the 4 nuts holding the injection pump to the timing gear case.

Torque: 18 N·m (185 kgf·cm, 13 ft·lbf)

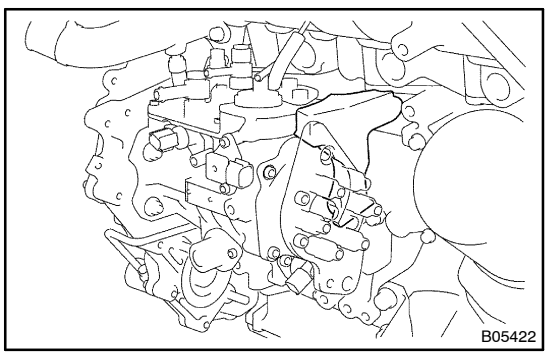

(g) Install the No.3 cylinder block insulator.

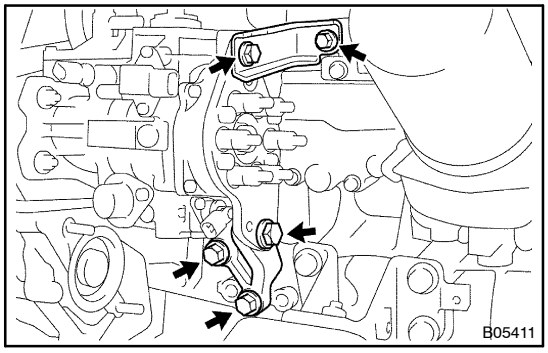

(h) Install the injection pump stay with the 3 bolts.
Torque: 69 N·m (700 kgf·cm, 51 ft·lbf)

NOTICE:
Before tightening to the standard torque, check whether the pump stay is up against the injection pump.
If there is a gap, loosen the bolts joining the pump stay to the cylinder block and set the pump stay against the injection pump.

(i) Install the pump stay bracket wit the 2 bolts.
Torque: 39 N·m (398 kgf·cm, 29 ft·lbf)

(j) Install a new O–Ring to the injection pump drive gear.

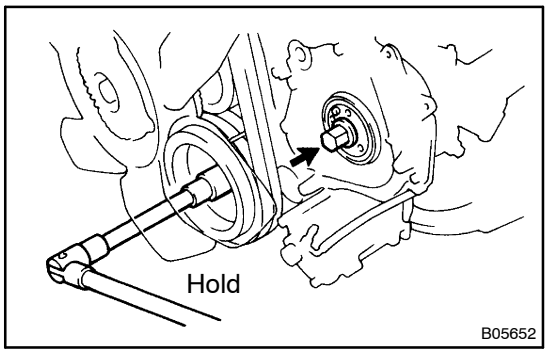

(k) Install the injection pump drive gear set nut.

(l) Hold the crankshaft pulley, and torque the nut.
Torque: 137 N·m (1,400 kgf·cm, 101 ft·lbf)

NOTICE:
Do not turn the crankshaft pulley. The valve heads will hit against the piston top.

2. CONNECT CONNECTORS

Connect these connectors:

- Engine speed sensor connector
- Spill control valve connector
- Correction resister connector
- Timing control valve connector
- Fuel temperature sensor connector

3. CONNECT FUEL RETURN HOSES

4. INSTALL INJECTION PIPE (See page FU–44)

5. INSTALL NO.2 CAMSHAFT TIMING PULLEY (See page EM–29)

6. INSTALL TIMING BELT (See page EM–29)

7. START ENGINE AND CHECK FOR FUEL LEAKAGE