Europe

Recommended Viscosity (SAE):

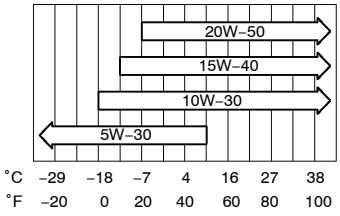

Except Europe

Recommended Viscosity (SAE):

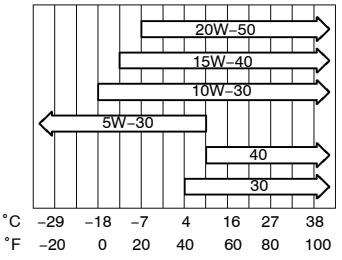

B01537
B01538

B01667

OIL AND FILTER

LU0EO–01

INSPECTION

1. CHECK ENGINE OIL QUALITY

Check the oil for deterioration, entry of water, discoloring or thinning.

If the quality is visibly poor, replace the oil.

Oil grade:

API CF–4 (You may also use API CF, CE or CD)

If you use SAE 10W–30 or higher viscosity oil in extremely low temperatures, the engine may become difficult to start, so SAE 5W–30 engine oil is recommended.

2. CHECK ENGINE OIL LEVEL

After warming up the engine and then 5 minutes after the engine stop, oil level should be between "L" and "F" of the dipstick. If low, check for leakage and add oil up to "F" mark.

NOTICE:

Do not fill with engine oil above the "F" mark.

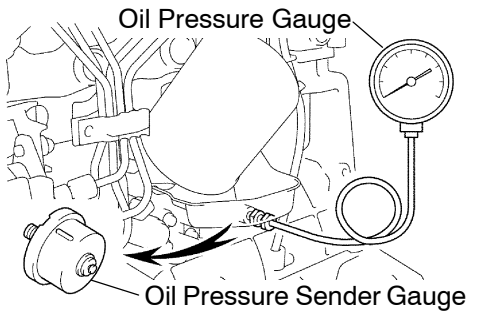

B05152

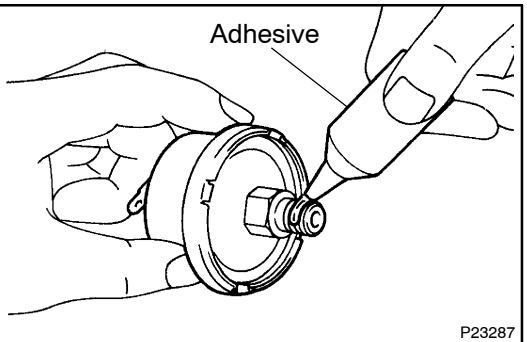

P23287

3. REMOVE OIL PRESSURE SENDER GAUGE

4. INSTALL OIL PRESSURE GAUGE

5. WARM UP ENGINE

Allow the engine to warm up to normal operating temperature.

6. CHECK OIL PRESSURE

Oil pressure:

At idle: 29 kPa (0.3 kgf/cm^2, 4.3 psi) or more

At 3,000 rpm:

250 – 600 kPa (2.5 – 6.1 kgf/cm^2, 36 – 87 psi)

7. REMOVE OIL PRESSURE GAUGE

8. REINSTALL OIL PRESSURE SENDER GAUGE

(a) Apply adhesive to 2 or 3 threads of the oil pressure sender gauge.

Adhesive:

Part No. 08833–00080, THREE BOND 1344, LOCTITE 242 or equivalent

(b) Install the oil pressure sender gauge.

9. START ENGINE AND CHECK FOR ENGINE OIL LEAKS