LU0EP–01

REPLACEMENT

CAUTION:

- **Prolonged and repeated contact with mineral oil will result in the removal of natural fats from the skin, leading to dryness, irritation and dermatitis. In addition, used engine oil contains potentially harmful contaminants which may cause skin cancer.**
- **Care should be taken, therefore, when changing engine oil to minimize the frequency and length of time your skin is exposed to used engine oil. Protective clothing and gloves that cannot be penetrated by oil should be worn. The skin should be thoroughly washed with soap and water, or use water–less hand cleaner, to remove any used engine oil. Do not use gasoline, thinners, or solvents.**
- **In order to preserve the environment, used oil and used oil filters must be disposed of only at designated disposal sites.**

1. DRAIN ENGINE OIL

(a) Remove the oil filler cap.

(b) Remove the oil drain plug and drain the oil into a container.

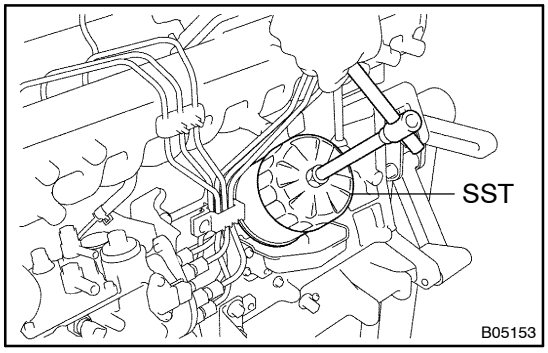

2. REPLACE OIL FILTER

(a) Using SST, remove the oil filter.
SST 09228–10002

(b) Clean the oil filter contact surface on the oil filter mounting.

(c) Lubricate the filter rubber gasket with clean engine oil.

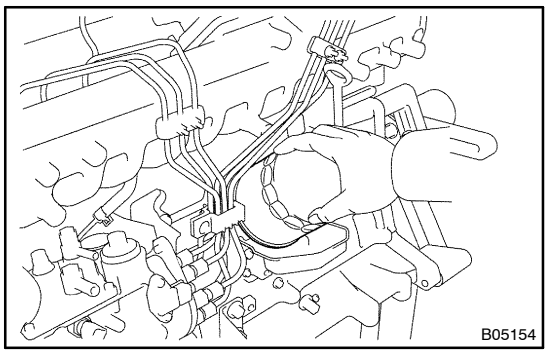

(d) Tighten the oil filter by hand until the rubber gasket contacts the seat of the filter mounting.

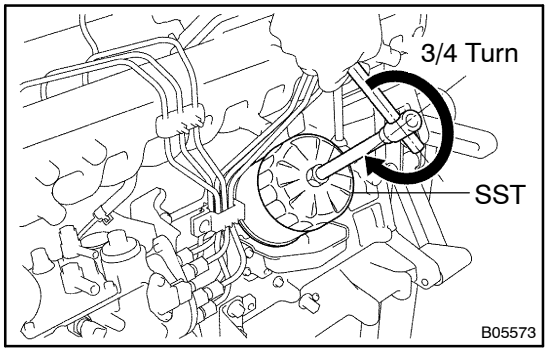

(e) Using SST, give it an additional 3/4 turn to seat the filter.
SST 09228–10002

3. REFILL WITH ENGINE OIL

(a) Clean the drain plug and install a new gasket and it.
Torque: 34.3 N·m (350 kgf·cm, 25 ft·lbf)

(b) Fill with new engine oil.
Capacity:
1HZ
Drain and refill
w/ oil filter change:
9.3 liters (9.9 US qts, 8.2 Imp. qts)
w/o oil filter change:
8.0 liters (8.5 US qts, 7.0 Imp. qts)
Dry fill:
10.4 liters (11.0 US qts, 9.2 Imp. qts)
1HD–T
Drain and refill
w/ oil filter change:
11.4 liters (12.0 US qts, 10.0 Imp. qts)
w/o oil filter change:
10.1 liters (10.7 US qts, 8.9 Imp. qts)
Dry fill:
11.7 liters (12.3 us qts, 10.3 Imp. qts)
1HD–FTE
Drain and refill
w/ oil filter change:
11.4 liters (12.0 US qts, 10.0 Imp. qts)
w/o oil filter change:
10.1 liters (10.7 US qts, 8.9 Imp. qts)
Dry fill:
12.1 liters (12.8 US qts, 10.6 Imp. qts)

(c) Reinstall the oil filler cap.

4. START ENGINE AND CHECK FOR OIL LEAKS

5. RECHECK ENGINE OIL LEVEL