OIL PUMP

COMPONENTS

LU0EQ–02

1HZ and 1HD–T

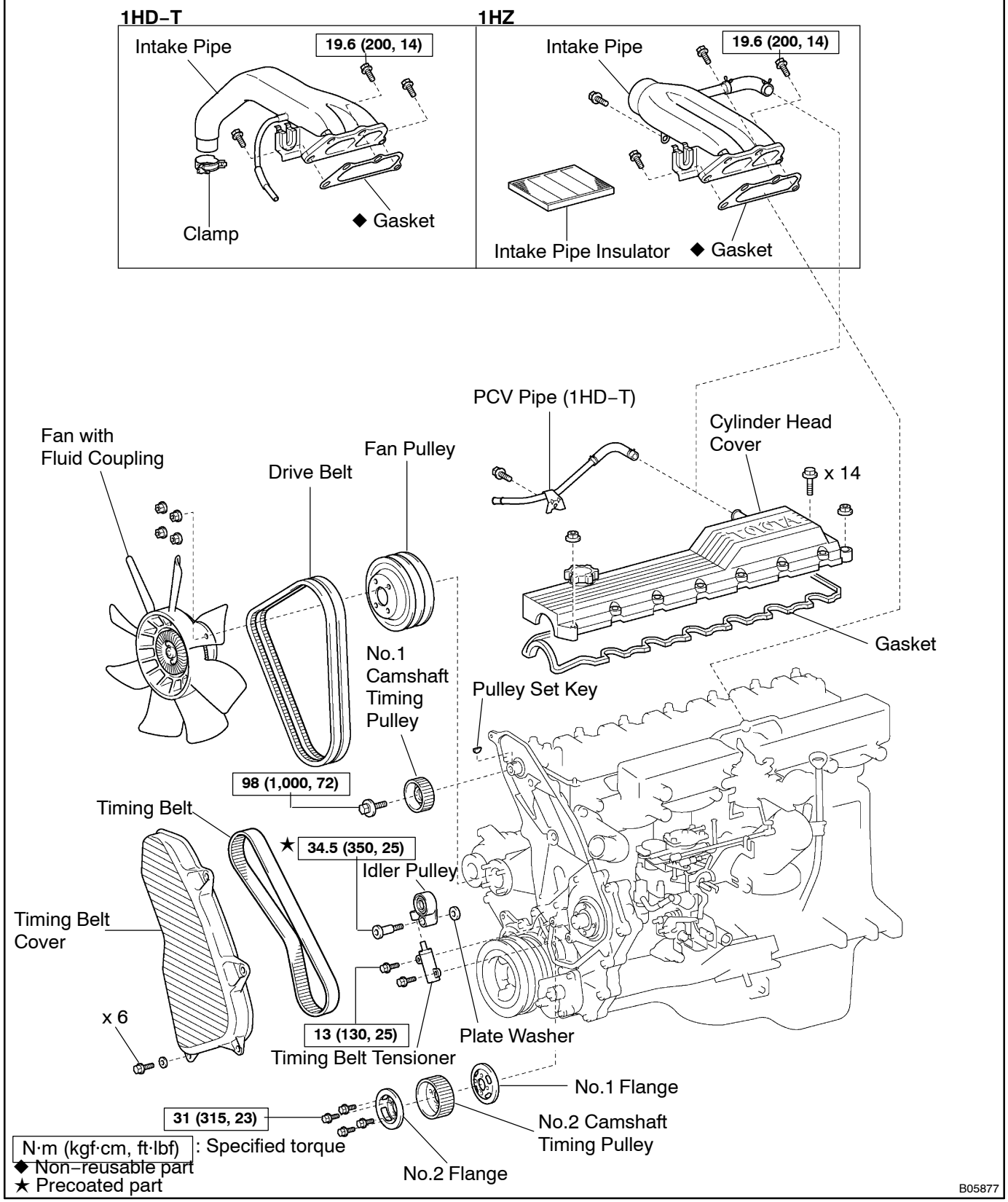

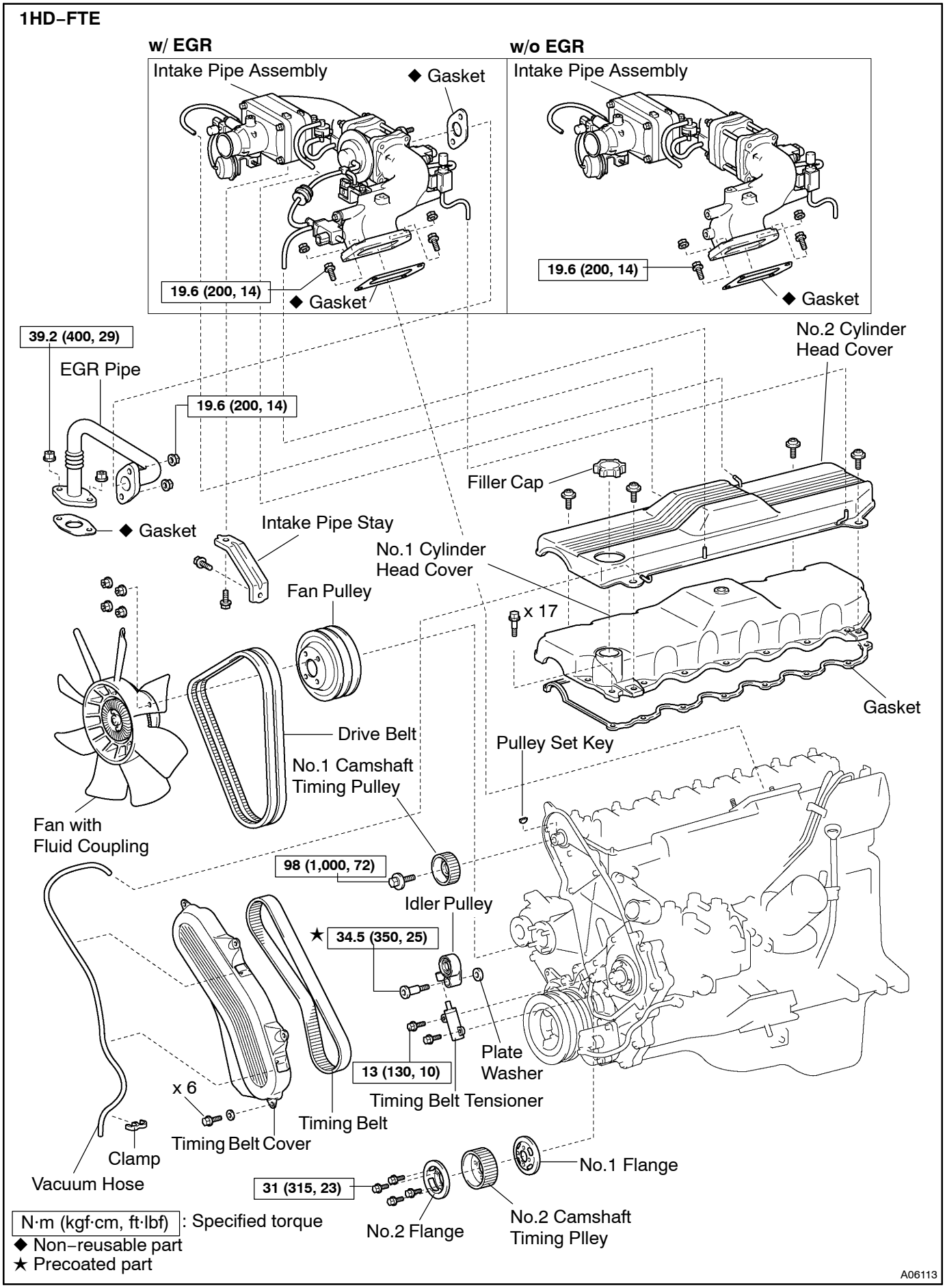
1HD–FTE
w/ EGR
w/o EGR
Intake Pipe Assembly
◆ Gasket
19.6 (200, 14)
◆ Gasket
Intake Pipe Assembly
19.6 (200, 14)
◆ Gasket
39.2 (400, 29)
EGR Pipe
19.6 (200, 14)
◆ Gasket
Intake Pipe Stay
Fan Pulley
No.2 Cylinder Head Cover
Filler Cap
No.1 Cylinder Head Cover
x 17
Gasket
Drive Belt
No.1 Camshaft Timing Pulley
Pulley Set Key
Fan with Fluid Coupling
98 (1,000, 72)
Idler Pulley
★ 34.5 (350, 25)
Plate Washer
13 (130, 10)
Timing Belt Tensioner
x 6
Timing Belt
Timing Belt Cover
Clamp
Vacuum Hose
31 (315, 23)
No.1 Flange
No.2 Flange
No.2 Camshaft Timing Plley
N·m (kgf·cm, ft·lbf) : Specified torque
◆ Non–reusable part
★ Precoated part
A06113

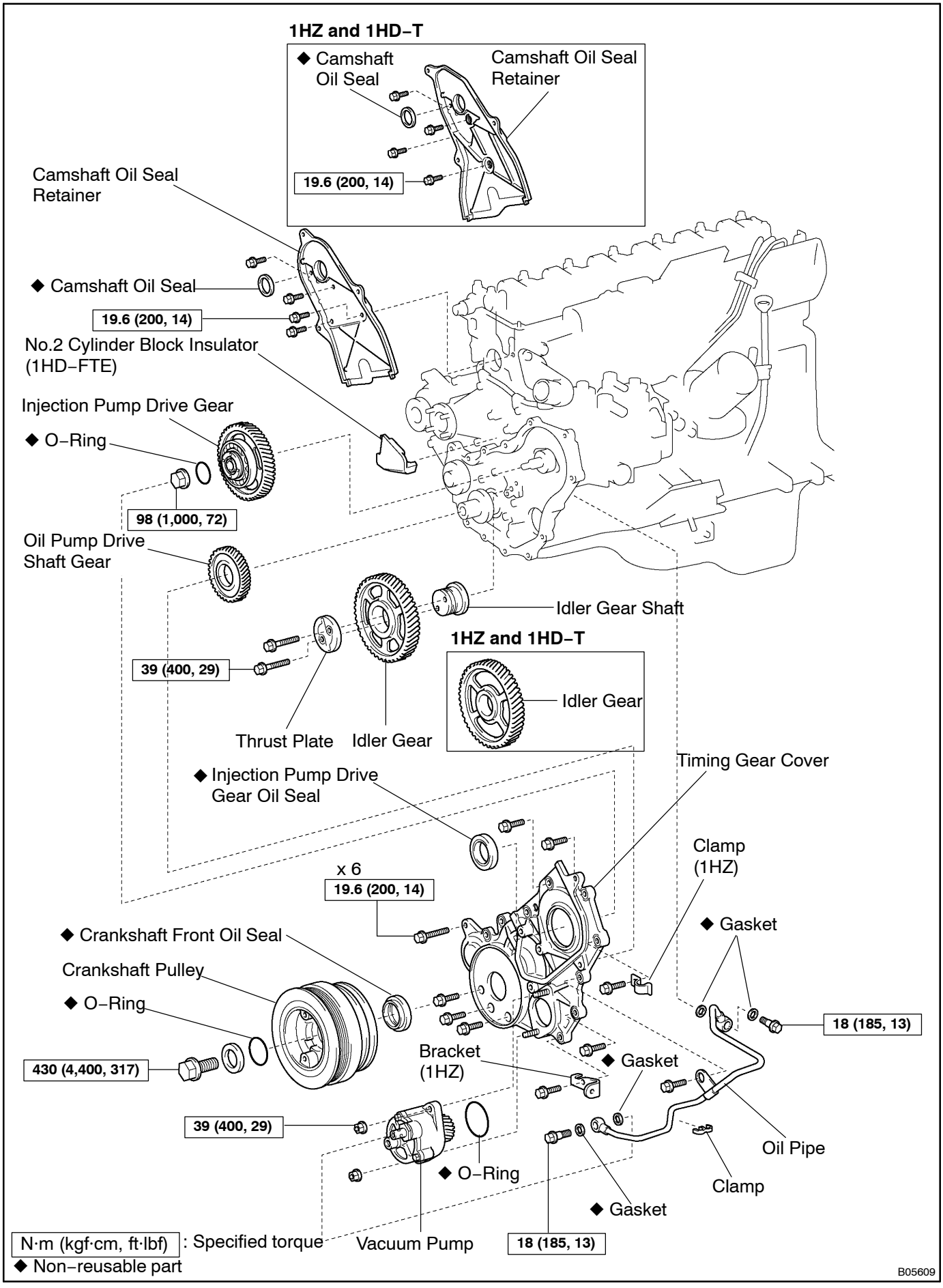
1HZ and 1HD–T
◆ Camshaft Oil Seal
Camshaft Oil Seal Retainer
19.6 (200, 14)
Camshaft Oil Seal Retainer
◆ Camshaft Oil Seal
19.6 (200, 14)
No.2 Cylinder Block Insulator (1HD–FTE)
Injection Pump Drive Gear
◆ O–Ring
98 (1,000, 72)
Oil Pump Drive Shaft Gear
Idler Gear Shaft
1HZ and 1HD–T
Idler Gear
39 (400, 29)
Thrust Plate
Idler Gear
Timing Gear Cover
◆ Injection Pump Drive Gear Oil Seal
Clamp (1HZ)
x 6
19.6 (200, 14)
◆ Gasket
◆ Crankshaft Front Oil Seal
Crankshaft Pulley
◆ O–Ring
18 (185, 13)
430 (4,400, 317)
Bracket (1HZ)
◆ Gasket
39 (400, 29)
Oil Pipe
◆ O–Ring
Clamp
◆ Gasket
N·m (kgf·cm, ft·lbf) : Specified torque
◆ Non–reusable part
Vacuum Pump
18 (185, 13)
B05609

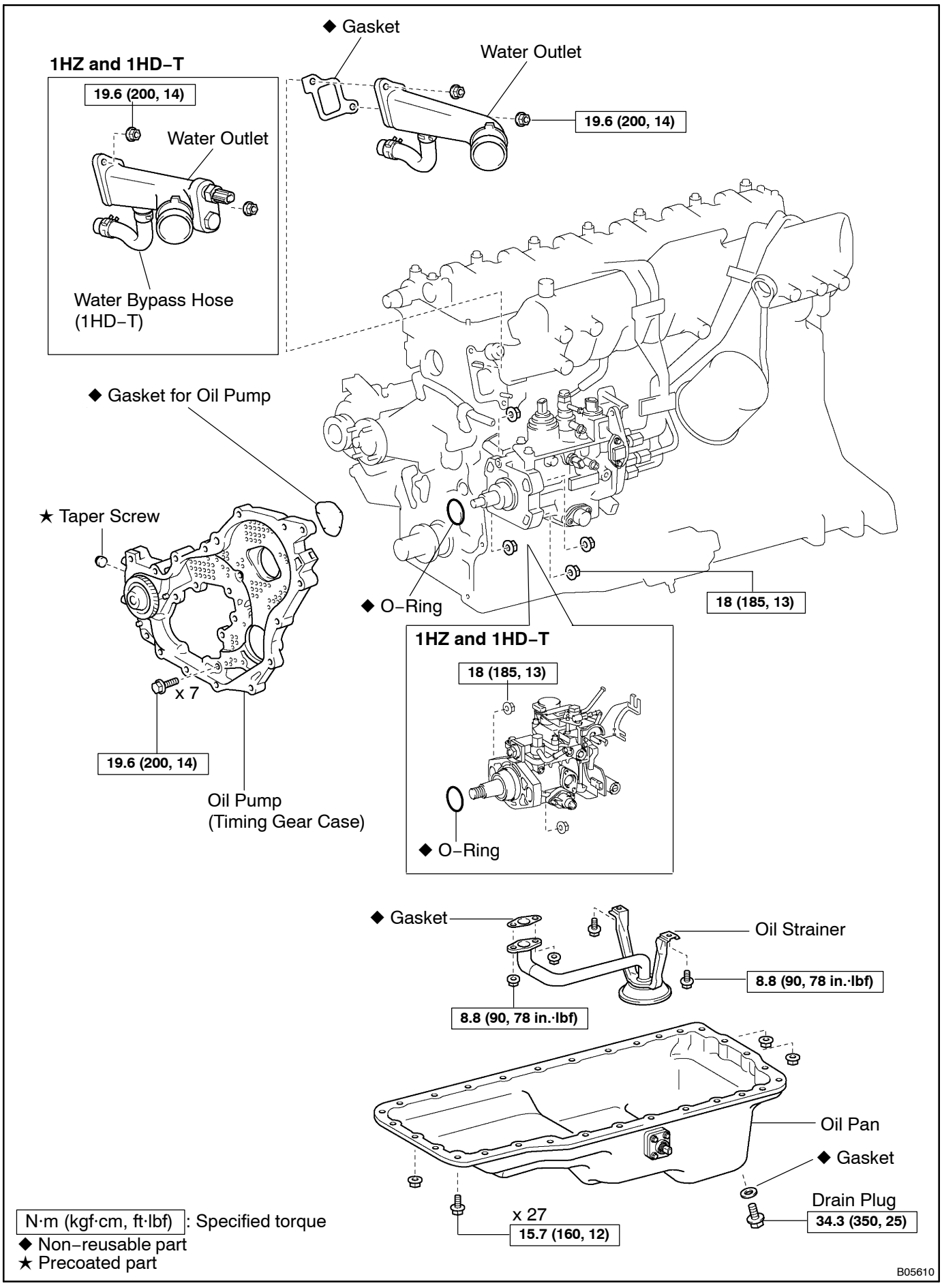
◆ Gasket
Water Outlet
1HZ and 1HD–T
19.6 (200, 14)
Water Outlet
19.6 (200, 14)
Water Bypass Hose
(1HD–T)
◆ Gasket for Oil Pump
★ Taper Screw
x 7
19.6 (200, 14)
Oil Pump
(Timing Gear Case)
◆ O–Ring
18 (185, 13)
1HZ and 1HD–T
18 (185, 13)
◆ O–Ring
◆ Gasket
Oil Strainer
8.8 (90, 78 in.·lbf)
8.8 (90, 78 in.·lbf)
Oil Pan
◆ Gasket
Drain Plug
34.3 (350, 25)
x 27
15.7 (160, 12)
N·m (kgf·cm, ft·lbf) : Specified torque
◆ Non–reusable part
★ Precoated part
B05610

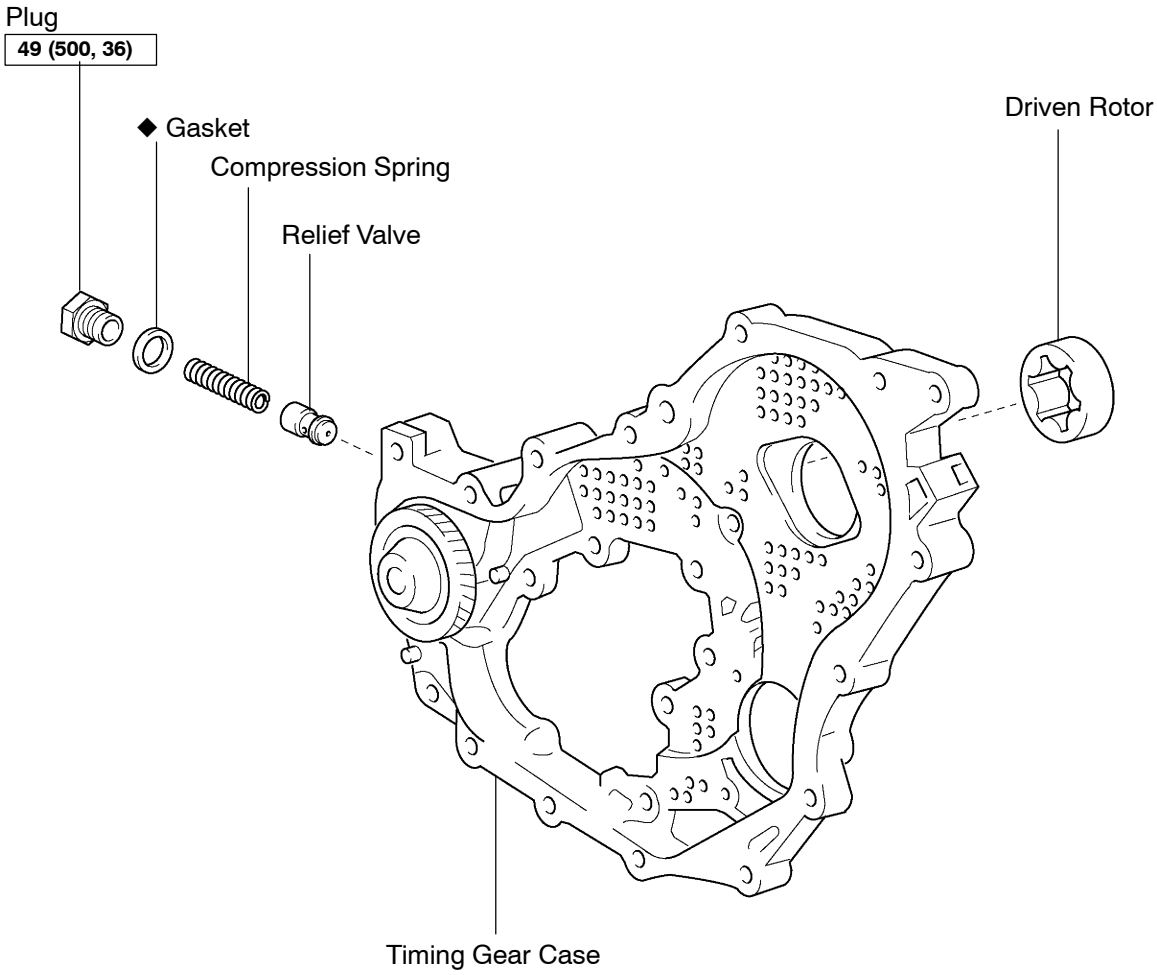

N·m (kgf·cm, ft·lbf) : Specified torque
◆ Non–reusable part

B05588