LU0ER–01

REMOVAL

HINT:
When repairing the oil pump, the oil pan and strainer should be removed and cleaned.

1. **DRAIN ENGINE COOLANT**
2. **DRAIN ENGINE OIL**
3. **REMOVE TIMING GEARS (See page EM–37)**
4. **REMOVE OIL PAN**

(a) Remove 27 bolts and 3 nuts.

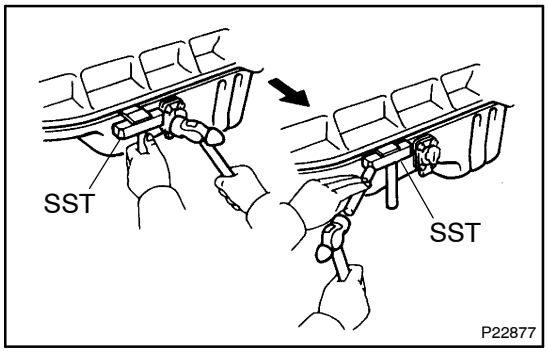

(b) Insert the blade of SST between the cylinder block and oil pan, and cut off applied sealer and remove the oil pan
SST 09032–00100

NOTICE:

- **Do not use SST for the oil pump body side and rear oil seal retainer.**
- **Be careful not to damage the oil pan flange.**

5. **REMOVE WATER OUTLET**
(1HZ and 1HD–T: See page EM–48)
(1HD–FTE: See page EM–77)
6. **REMOVE OIL PUMP**

(a) 1HZ and 1HD–T:
Remove the 2 nuts holding the injection pump to the timing gear case.

(b) 1HD–FTE:
Remove the 4 nuts holding the injection pump to the timing gear case.

(c) Remove the 7 bolts holding the timing gear case to the cylinder block.

(d) Using a screwdriver, remove the oil pump by plying the portions between the oil pump and cylinder block.

(e) Remove the gasket and O–ring.

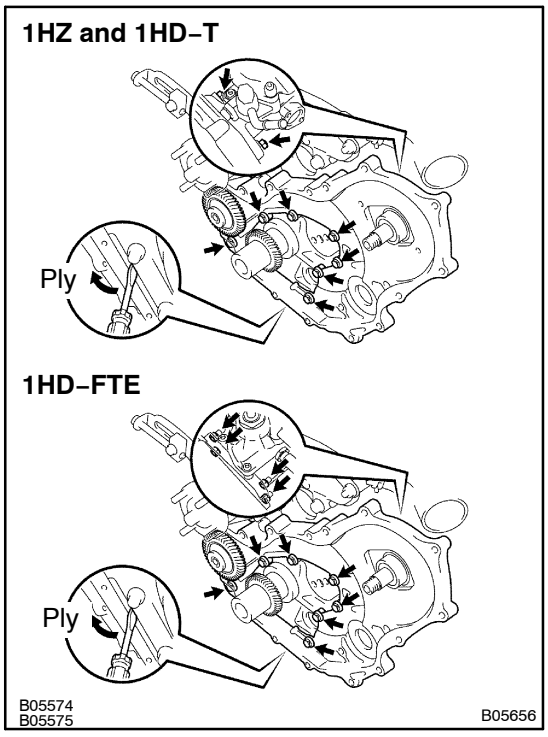

7. **REMOVE OIL STRAINER**

Remove the 2 bolts, 2nuts, oil strainer and gasket.

