LU0ET–01

INSPECTION

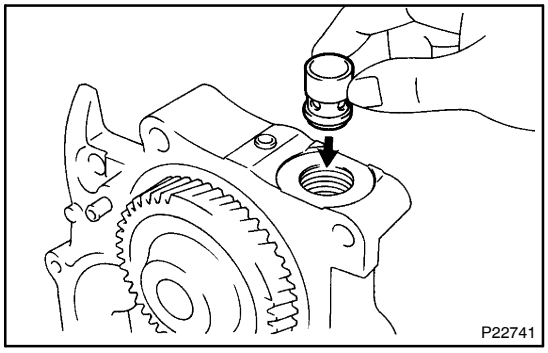

1. INSPECT RELIEF VALVE

Coat the valve with engine oil and check that it falls smoothly into the valve hole by its own weight.

If it doesn't, replace the relief valve. If necessary, replace the oil pump assembly.

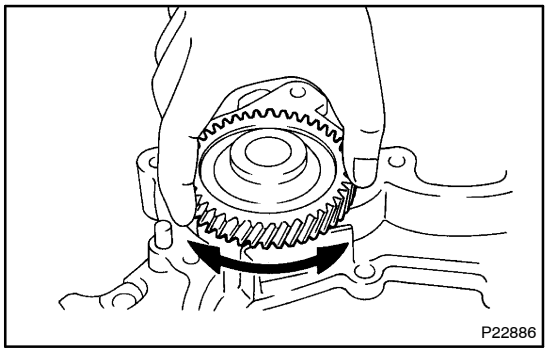

2. INSPECT DRIVE SHAFT

Turn the gear, and check that the drive shaft moves smoothly and quietly.

If necessary, replace the oil pump assembly.

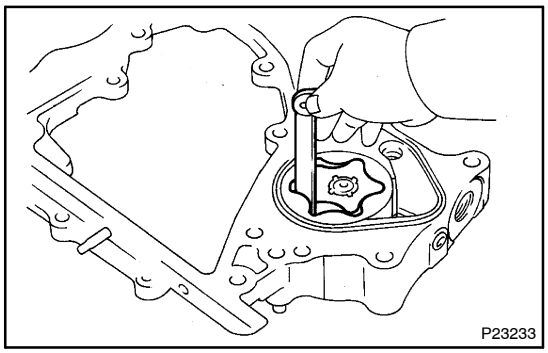

3. INSPECT DRIVE AND DRIVEN ROTORS FOR TIP CLEARANCE

Using a feeler gauge, measure the clearance between the drive and driven rotor tips.

Standard tip clearance:
0.080 – 0.160 mm (0.0031 – 0.0063 in.)
Maximum tip clearance: 0.21 mm (0.0083 in.)

If the tip clearance is greater than maximum, replace the oil pump assembly.

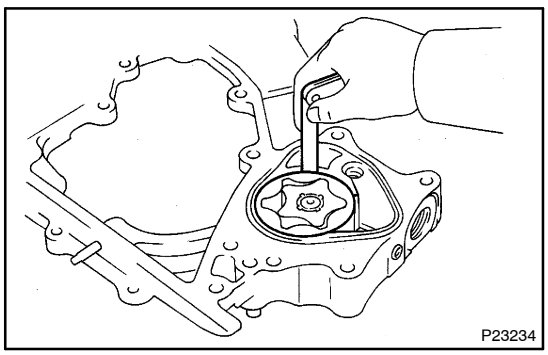

4. INSPECT DRIVE AND DRIVEN ROTORS FOR BODY CLEARANCE

Using a feeler gauge, measure the clearance between the driven rotor and body.

Standard body clearance:
0.100 – 0.170 mm (0.0039 – 0.0067 in.)
Maximum body clearance: 0.20 mm (0.0079 in.)

If the body clearance is greater than maximum, replace the oil pump assembly.

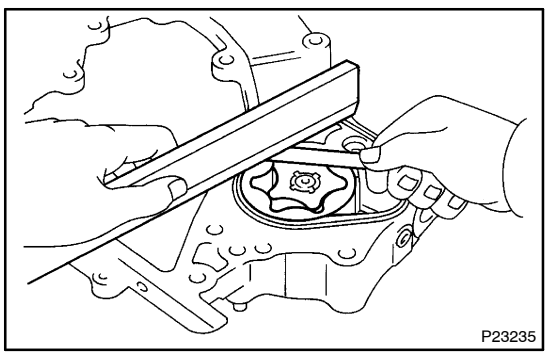

5. INSPECT DRIVE AND DRIVEN ROTORS FOR SIDE CLEARANCE

Using a feeler gauge and precision straight edge, measure the clearance between the rotors and precision straight edge.

Standard side clearance:
0.030 – 0.090 mm (0.0012 – 0.0035 in.)
Maximum side clearance: 0.15 mm (0.0059 in.)

If the side clearance is greater than maximum, replace the oil pump assembly.