LU0EV–01

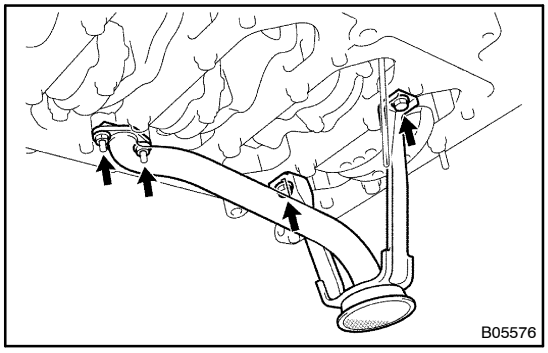

INSTALLATION

1. INSTALL OIL STRAINER

Install a new gasket and the oil strainer with the 2 bolts and 2 nuts.

Torque: 8.8 N·m (90 kgf·cm, 78 in.·lbf)

2. INSTALL OIL PUMP (TIMING GEAR CASE)

(a) Remove the any old packing (FIPG) material and be careful no to drop any oil on the contact surfaces of the timing gear case and cylinder block.

- Using a razor blade and gasket scraper, remove all the old packing (FIPG) material from the gasket surfaces and sealing groove.
- Thoroughly clean all components to remove all the loose materials.
- Using a non–residue solvent, clean both sealing surfaces.

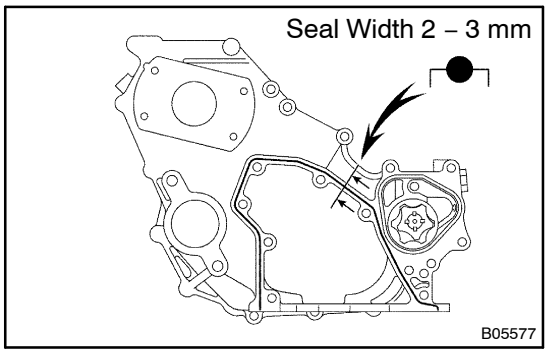

(b) Apply seal packing to the timing gear case as shown in the illustration.

Seal packing: Part No. 08826–00080 or equivalent

- Install a nozzle that has been cut to a 2 – 3 mm (0.08 – 0.12 in.) opening.
- Parts must be assembled within 5 minutes of application. Otherwise the material must be removed and reapplied.
- Immediately remove nozzle from the tube and reinstall it.

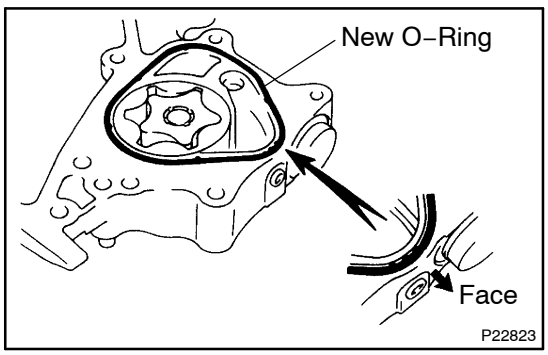

(c) Place a new gasket into the groove of the timing gear case as shown in the illustration.

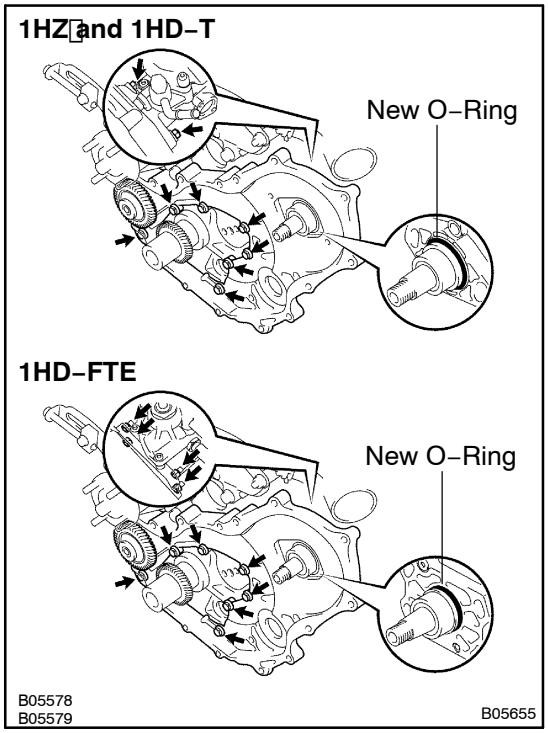

(d) Install a new o–ring to the injection pump.

(e) Install the timing gear case to the cylinder block with the 7 bolts. Uniformly tighten the bolts in several passes.
Torque: 19.6 N·m (200 kgf·cm, 14 ft·lbf)

(f) 1HZ and 1HD–T:
Install the 2 nuts holding the injection pump to the timing gear case.
Torque: 18 N·m (185 kgf·cm, 13 ft·lbf)

(g) 1HD–FTE:
Install the 4 nuts holding the injection pump to the timing gear case.
Torque: 18 N·m (185 kgf·cm, 13 ft·lbf)

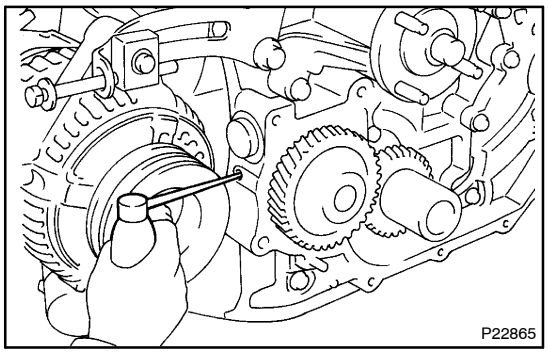

3. POUR ENGINE OIL INTO OIL PUMP

(a) Using a 5 mm hexagon wrench, remove the taper screw plug.

(b) Pour in approx. 10 cc (0.6 cu in.) of engine oil into the oil pump.

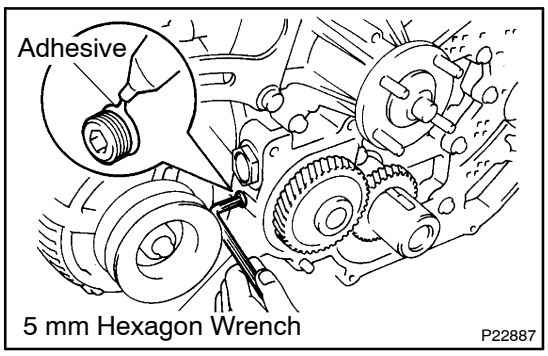

(c) Apply adhesive to 2 or 3 threads of the taper screw plug.
Adhesive:
part No. 08833–00080, THREE BOND 1344, LOCTITE 242 or equivalent

(d) Using a 5 mm hexagon wrench, install the taper screw plug.

4. INSTALL WATER OUTLET
(1HZ and 1HD–T: See page EM–66)
(1HD–FTE: See page EM–94)

5. INSTALL OIL PAN

(a) Remove the any old packing (FIPG) material and be careful no to drop any oil on the contact surfaces of the timing gear case and cylinder block.

- Using a razor blade and gasket scraper, remove all the old packing (FIPG) material from the gasket surfaces and sealing groove.
- Thoroughly clean all components to remove all the loose materials.
- Using a non–residue solvent, clean both sealing surfaces.

NOTICE:
Do not use a solvent which will affect the painted surfaces.

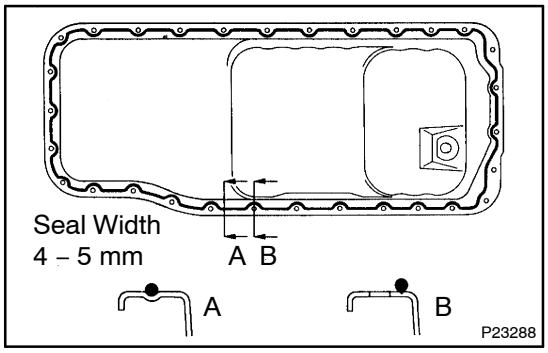

(b) Apply seal packing to the oil pan as shown in the illustration.

Seal packing: Part No. 08826–00080 or equivalent

- Install a nozzle that has been cut to a 4 – 5 mm (0.15 – 0.20 in.) opening.
- Parts must be assembled within 5 minutes of application. Otherwise the material must be removed and reapplied.
- Immediately remove nozzle from the tube and reinstall it.

(c) Install the oil pan with the 27 bolts and 3 nuts. Uniformly tighten the bolts and nuts in several passes.

Torque: 9.8 N·m (100 kgf·cm, 87 in.·lbf)

6. INSTALL TIMING GEARS (See page EM–44)
7. FILL WITH ENGINE OIL
8. FILL WITH ENGINE COOLANT
9. START ENGINE AND CHECK FOR OIL LEAKS
10. RECHECK ENGINE OIL LEVEL