OIL COOLER

COMPONENTS

LU0EW–01

1HZ and 1HD–T

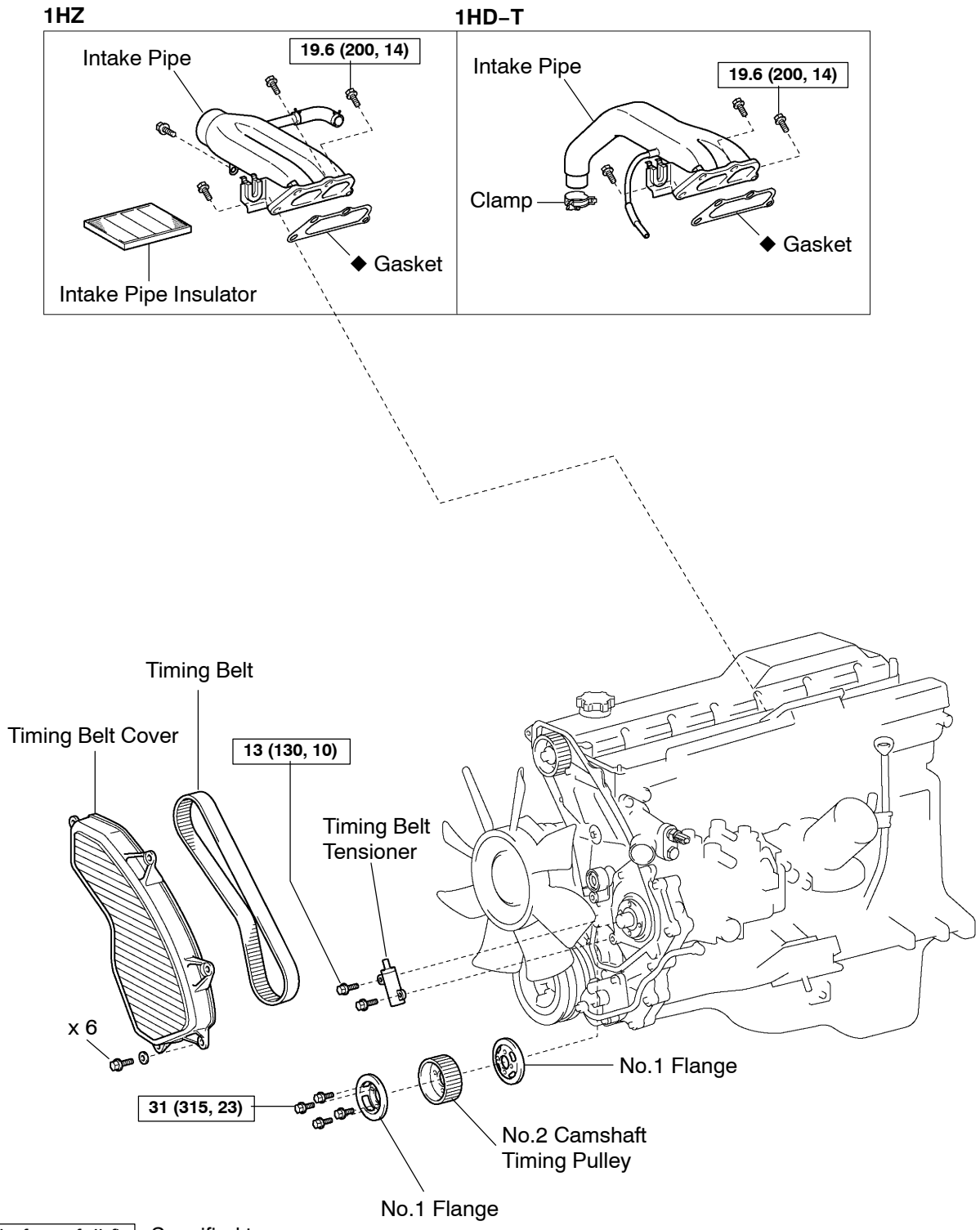

N·m (kgf·cm, ft·lbf) : Specified torque
◆ Non–reusable part

B05611

1HD–FTE

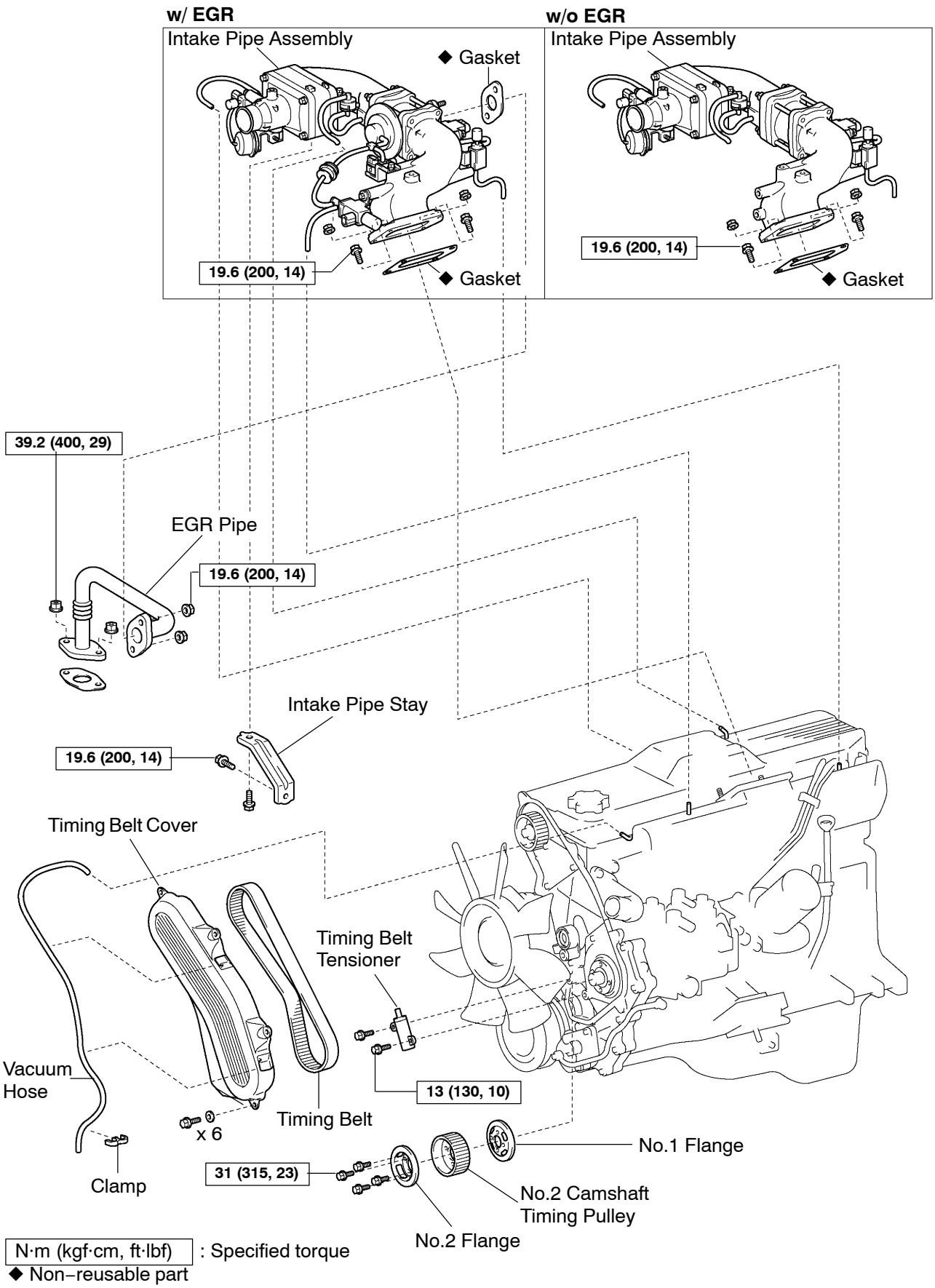
w/ EGR
Intake Pipe Assembly
◆ Gasket
19.6 (200, 14)
◆ Gasket
w/o EGR
Intake Pipe Assembly
19.6 (200, 14)
◆ Gasket
39.2 (400, 29)
EGR Pipe
19.6 (200, 14)
Intake Pipe Stay
19.6 (200, 14)
Timing Belt Cover
Timing Belt Tensioner
13 (130, 10)
Vacuum Hose
x 6
Timing Belt
Clamp
31 (315, 23)
No.1 Flange
No.2 Camshaft Timing Pulley
No.2 Flange
N·m (kgf·cm, ft·lbf) : Specified torque
◆ Non–reusable part
B05612

1HZ and 1HD–T

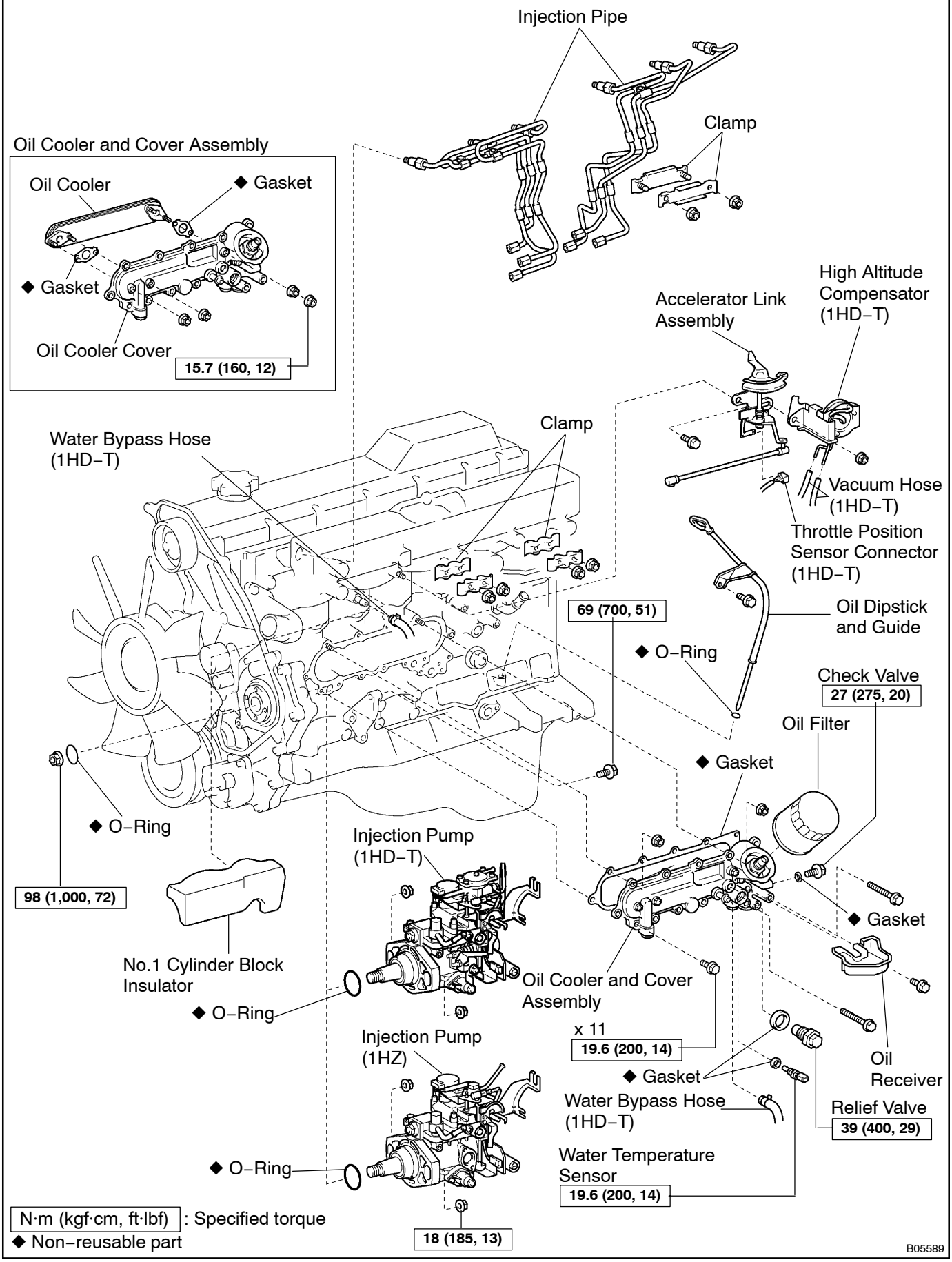
Injection Pipe
Clamp
Oil Cooler and Cover Assembly
Oil Cooler
◆ Gasket
◆ Gasket
Oil Cooler Cover
15.7 (160, 12)
High Altitude Compensator (1HD–T)
Accelerator Link Assembly
Clamp
Water Bypass Hose (1HD–T)
Vacuum Hose (1HD–T)
Throttle Position Sensor Connector (1HD–T)
Oil Dipstick and Guide
69 (700, 51)
◆ O–Ring
Check Valve
27 (275, 20)
Oil Filter
◆ Gasket
◆ O–Ring
98 (1,000, 72)
Injection Pump (1HD–T)
No.1 Cylinder Block Insulator
◆ O–Ring
Oil Cooler and Cover Assembly
◆ Gasket
Injection Pump (1HZ)
x 11
19.6 (200, 14)
◆ Gasket
Water Bypass Hose (1HD–T)
Oil Receiver
Relief Valve
39 (400, 29)
◆ O–Ring
Water Temperature Sensor
19.6 (200, 14)
18 (185, 13)
N·m (kgf·cm, ft·lbf) : Specified torque
◆ Non–reusable part
B05589

1HD–FTE

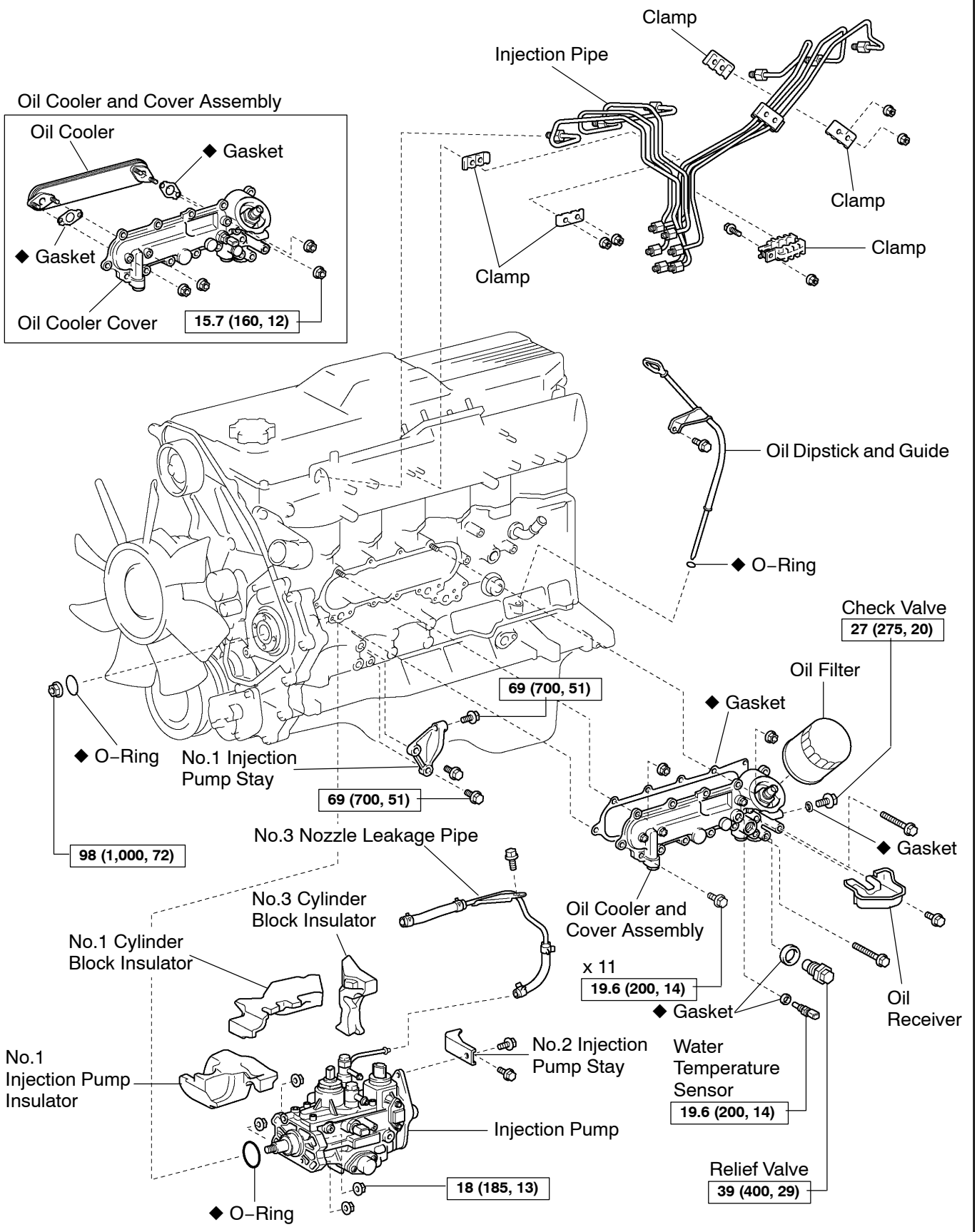

N·m (kgf·cm, ft·lbf) : Specified torque
◆ Non–reusable part

B05590