LU0EX–01

REMOVAL

1. **DRAIN ENGINE COOLANT**
2. **REMOVE TIMING BELT (See page EM–27)**
3. **REMOVE NO.2 CAMSHAFT TIMING PULLEY (See page EM–27)**
4. **REMOVE INJECTION PIPES**
   (1HZ: See page FU–7)
   (1HD–T: See page FU–17)
   (1HD–FTE: See page FU–33)
5. **REMOVE INJECTION PUMP**
   (1HZ and 1HD–T: See page FU–51)
   (1HD–FTE: See page FU–117)
6. **REMOVE OIL FILTER (See page LU–2)**

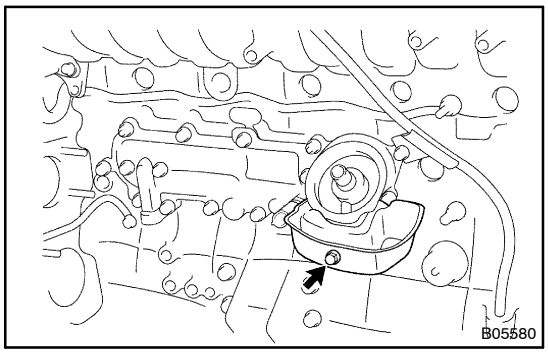

7. REMOVE OIL RECEIVER

Remove the bolt and oil receiver.

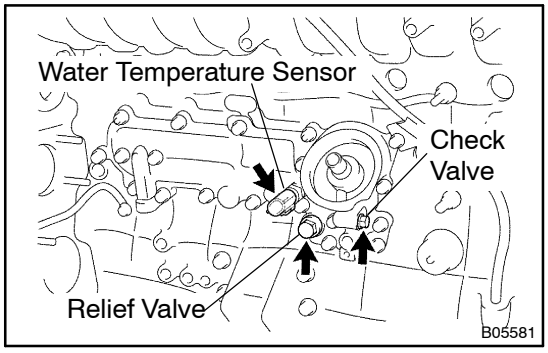

8. REMOVE RELIEF VALVE

Remove the relief valve and gasket.

9. REMOVE CHECK VALVE

Remove the check valve and gasket.

10. REMOVE WATER TEMPERATURE SENSOR

Remove the sensor and gasket.

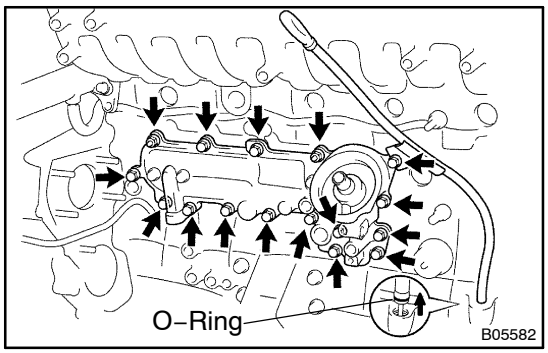

11. REMOVE OIL DIPSTICK AND GUIDE

(a) Remove the bolt, and pull out the dipstick guide together with the dipstick from the oil pan.

(b) Remove the O–ring from the dipstick guide.

12. REMOVE OIL COOLER AND COVER ASSEMBLY

Remove the 13 bolts, 2 nuts, the oil cooler, cover assembly and gasket.

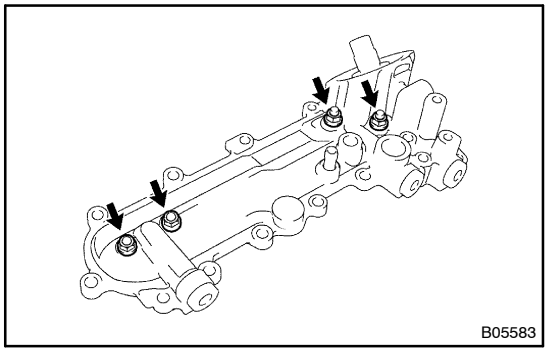

13. REMOVE OIL COOLER FROM OIL COOLER COVER

Remove the 4 nuts and oil cooler.