LU0EY–01

INSPECTION

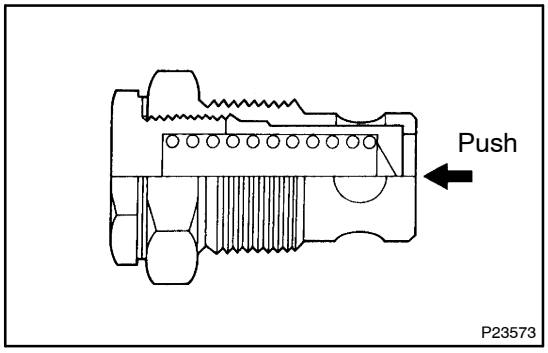

1. INSPECT RELIEF VALVE

Push the valve with a wooden stick to check if it is stuck.
If stuck, replace the relief valve.

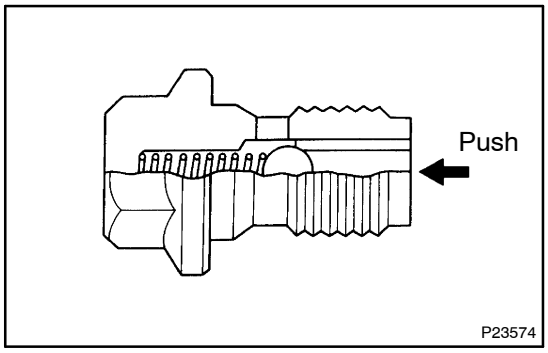

2. INSPECT CHECK VALVE

Push the valve with a wooden stick to check if it is stuck.
If stuck, replace the check valve.

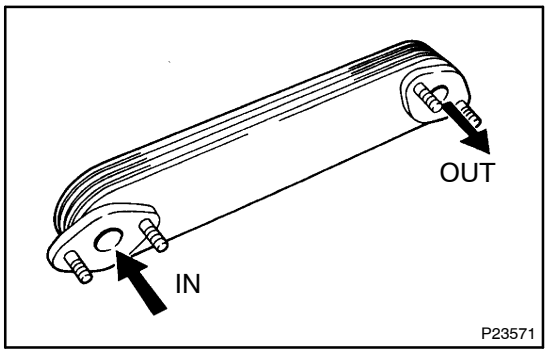

3. INSPECT OIL COOLER

Check the oil cooler for damage or clogging.
If necessary, replace the oil cooler.