LU0EZ–01

# INSTALLATION

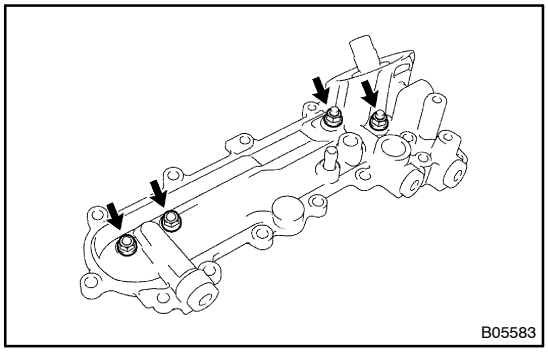


**1. INSTALL OIL COOLER TO OIL COOLER COVER**

Install 2 new gaskets and the oil cooler to the oil cooler cover with the 4 nuts.

**Torque: 15.7 N·m (160 kgf·cm, 12 ft·lbf)**

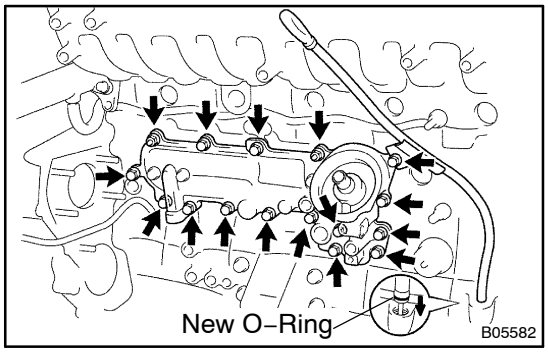


**2. INSTALL OIL COOLER AND COVER ASSEMBLY**

Install a new gasket, the oil cooler and cover assembly with the 13 bolts and 2 nuts. Uniformly tighten the bolts and nuts in several passes.

**Torque: 19.6 N·m (200 kgf·cm, 14 ft·lbf)**

**3. INSTALL OIL DIPSTICK GUIDE AND DIPSTICK**

(a) Install a new O–ring to the dipstick guide.

(b) Apply soapy water to the O–ring.

(c) Push in the dipstick guide end into the guide hole of the cylinder block.

(d) Install the oil dip stick guide with the bolt.

**Torque: 19.6 N·m (200 kgf·cm, 14 ft·lbf)**

(e) Install the dipstick.

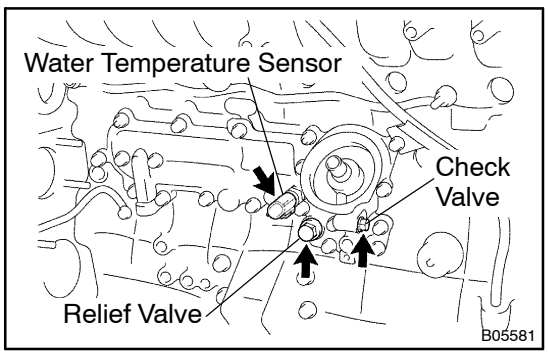


**4. INSTALL RELIEF VALVE**

Install a new gasket and the relief valve.

**Torque: 39 N·m (400 kgf·cm, 29 ft·lbf)**

**5. INSTALL CHECK VALVE**

Install a new gasket and the check valve.

**Torque: 27 N·m (275 kgf·cm, 20 ft·lbf)**

**6. INSTALL WATER TEMPERATURE SENSOR**

Install a new gasket and the sensor.

**Torque: 19.6 N·m (200 kgf·cm, 14 ft·lbf)**

**7. INSTALL OIL RECEIVER**

Install the oil receiver with the bolt.

**Torque: 19.6 N·m (200 kgf·cm, 14 ft·lbf)**

**8. INSTALL OIL FILTER (See page LU–2)**

**9. INSTALL INJECTION PUMP**

**(1HZ and 1HD–T: See page FU–13)**

**(1HD–FTE: See page FU–121)**

**10. INSTALL INJECTION PIPES**

**(1HZ: See page FU–13)**

**(1HD–T: See page FU–30)**

**(1HD–FTE: See page FU–44)**

11. INSTALL NO.2 CAMSHAFT TIMING PULLEY (See page EM–31)
12. INSTALL TIMING BELT (See page EM–31)
13. FILL WITH ENGINE COOLANT
14. START ENGINE AND CHECK FOR LEAKS
15. RECHECK ENGINE COOLANT LEVEL