OIL NOZZLE

COMPONENTS

LU0F0–01

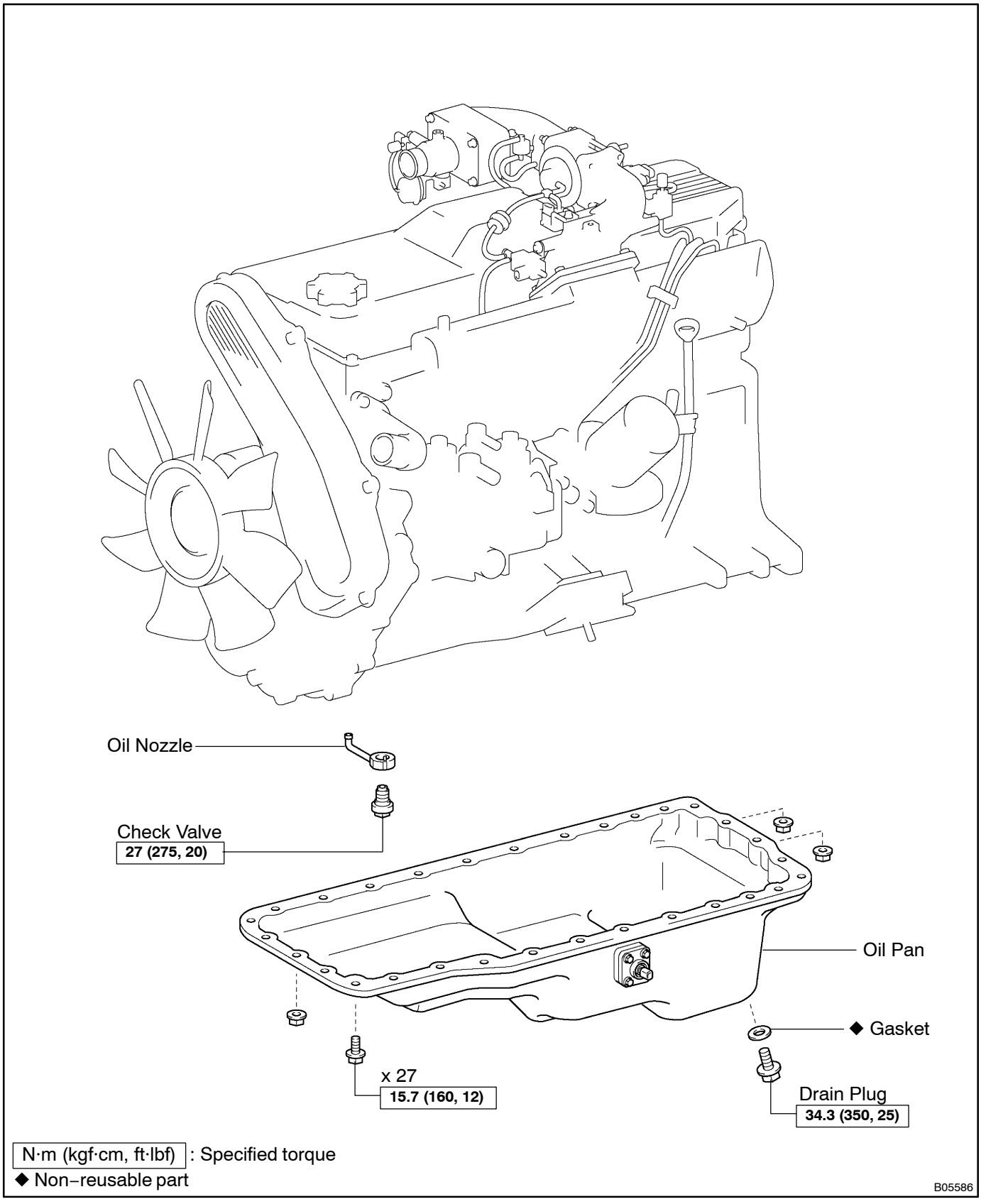

N·m (kgf·cm, ft·lbf) : Specified torque
◆ Non–reusable part

B05586