LU0F2–01

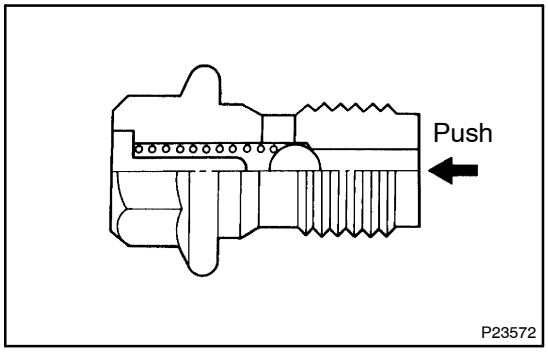

INSPECTION

1. INSPECT CHECK VALVES

Push the valve with a wooden stick to check if it is stuck.
If stuck, replace the check valve.

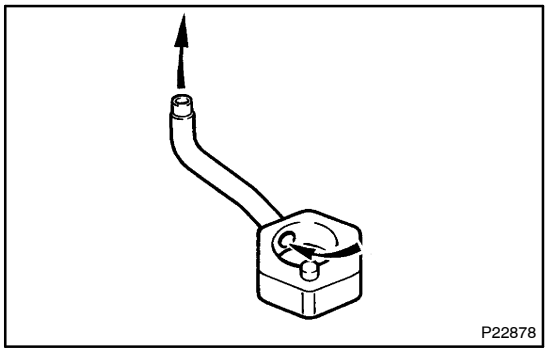

2. INSPECT OIL NOZZLES

Check the oil nozzle for damage or clogging.
If necessary, replace the oil nozzle.