ST0F8–01

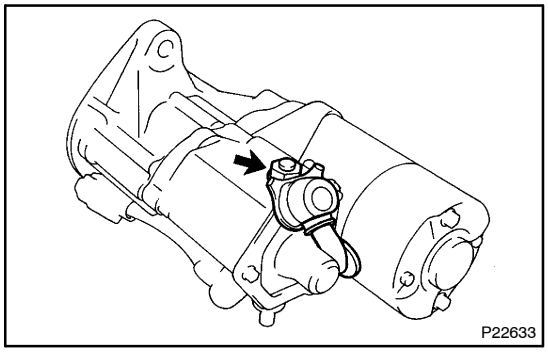

DISASSEMBLY

1. REMOVE 2 DUST PROTECTORS

2. REMOVE FIELD FRAME AND ARMATURE

(a) Remove the nut, and disconnect lead wire from the magnetic switch terminal.
Torque: 24.0 N·m (245 kgf·cm, 18 ft·lbf)

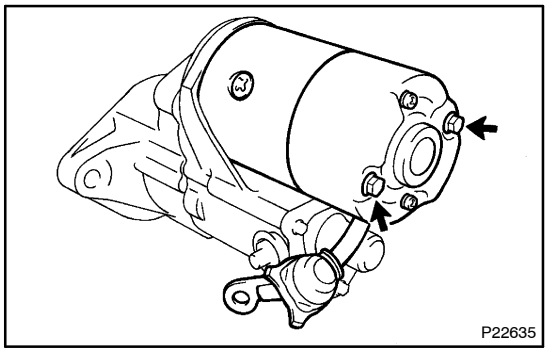

(b) Remove the 2 through bolts.
Torque: 9.3 N·m (95 kgf·cm, 82 in.·lbf)

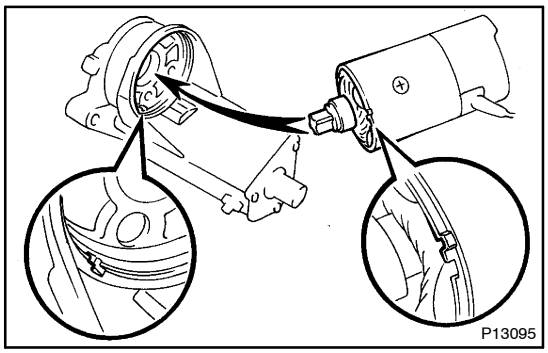

(c) Pull out the field frame together with the armature from the magnetic switch assembly.

NOTICE:
At the time of notice, please refer to the following items.
Align the protrusion of the field frame with the groove of the magnetic switch.

(d) Remove the felt washer from the rear bearing.

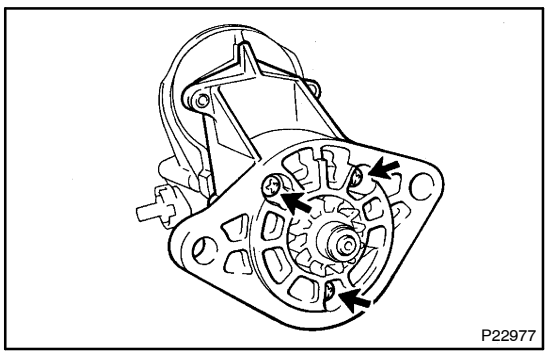

3. REMOVE STARTER HOUSING, CLUTCH ASSEMBLY AND GEAR

(a) Remove the 3 screws.
Torque: 9.3 N·m (95 kgf·cm, 82 in.·lbf)

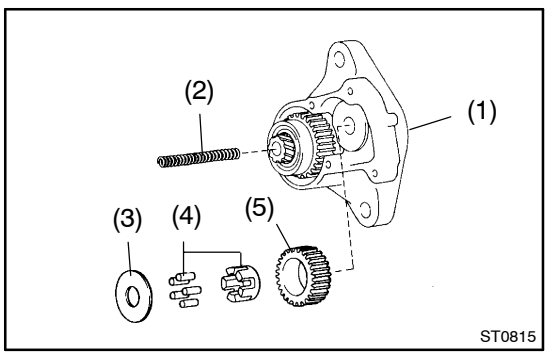

(b) Remove these parts from the magnetic switch assembly:
(1) Starter housing and clutch assembly
(2) Return spring
(3) Plate washer
(4) Bearing
(5) Idler gear

HINT:
At the time of assembly, please refer to the following items.
Apply grease to the return spring and insert the return spring into the clutch shaft hole.

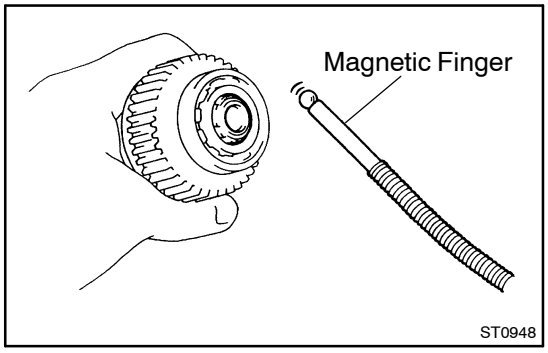

4. REMOVE STEEL BALL

Using a magnetic finger, remove the steel ball from the clutch shaft hole.

HINT:

At the time of assembly, please refer to the following items.

Apply grease to the steel ball and insert the steel ball into the clutch shaft hole.

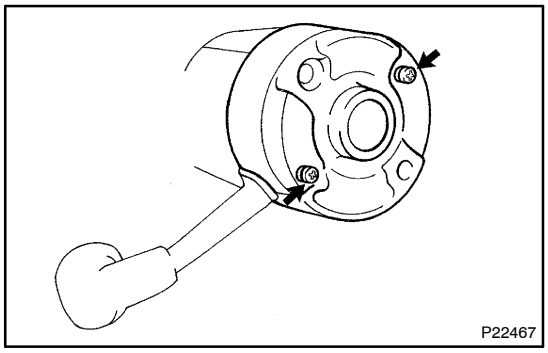

5. REMOVE BRUSH HOLDER

(a) Remove the 2 screws and cover from the field frame.
Torque: 3.6 N·m (37 kgf·cm, 32 in.·lbf)

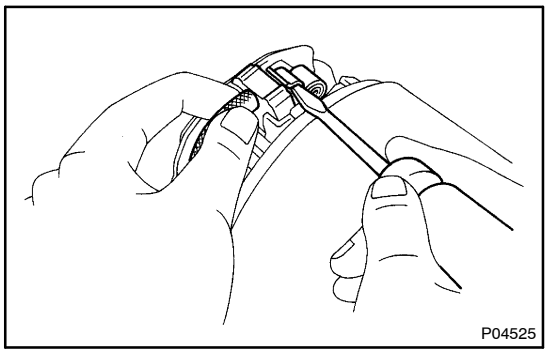

(b) Using a screwdriver, hold the spring tank back and disconnect the brush from the brush holder.

(c) Disconnect the 4 brushes, and remove the brush holder.

NOTICE:

Check that the positive (+) lead wires are not grounded.

6. REMOVE ARMATURE FROM FIELD FRAME