TURBOCHARGER

TC026–01

PRECAUTION

MAINTENANCE PRECAUTION

(a) Do not stop the engine immediately after pulling a trailer or after high speed or uphill driving. Idle the engine for 20 – 120 seconds, depending on how hard the vehicle has been driven.

(b) Avoid sudden acceleration or racing immediately after starting a cold engine.

(c) Do not run the engine with air cleaner removed, as this may cause foreign material to enter and damage the impeller wheel operating at high speed.

(d) If the turbocharger is found to be defective and must be replaced, check for the cause, and repair or replace these items as necessary:
- Engine oil level and quality
- Conditions under which the turbocharger was used
- Oil lines leading to the turbocharger

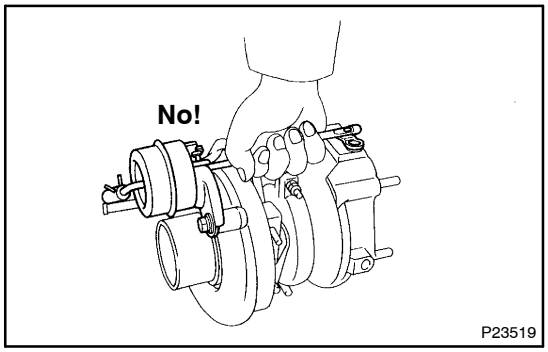

(e) Use caution when removing and reinstalling the turbocharger assembly. Do not drop it or bang it against anything or grasp it by easily–deformed parts, such as the actuator or rod, when moving it.

(f) Before removing the turbocharger, plug the intake and exhaust ports and oil inlet to prevent entry of dirt or other foreign material.

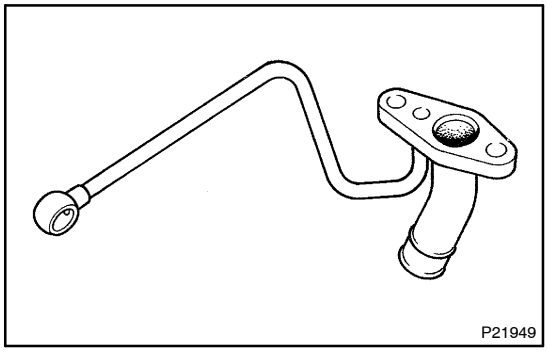

(g) If replacing the turbocharger, check for accumulation of sludge particles in the oil pipes, and if necessary, replace the oil pipes.

(h) Completely remove the gasket adhered to the lubrication oil pipe flange and turbocharger oil flange.

(i) When replacing bolt or nuts, use only authorized replacement parts to prevent breakage or deformation.

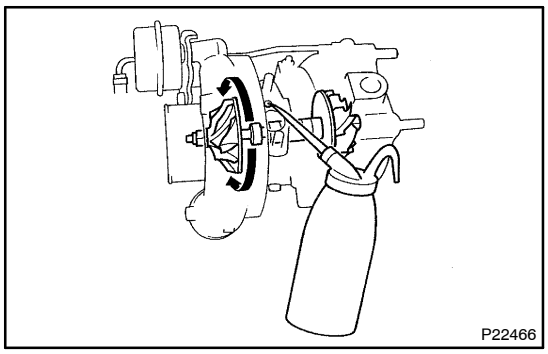

(j) If replacing the turbocharger, put 20 cm^3 (1.2 cu in.) of oil into the turbocharger oil inlet and turn the impeller wheel by hand to spread oil to the bearing.

(k) If overhauling or replacing the engine, cut the fuel supply after reassembly and crank the engine for 30 seconds to distribute oil throughout the engine.
Then allow the engine to idle for 60 seconds.

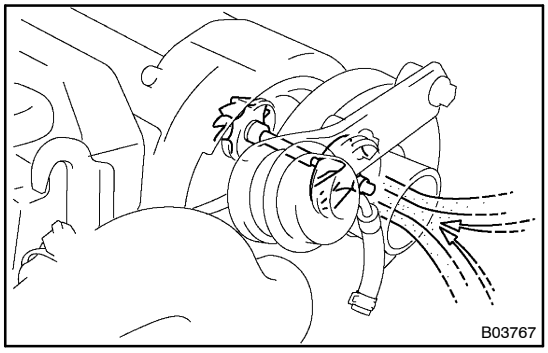

(l) If the engine is running with out the air cleaner, case cover and hose, entry of foreign particles will damage the wheel which run at extremely high speed.