TC028–01

COMPONENTS

1HD–T:

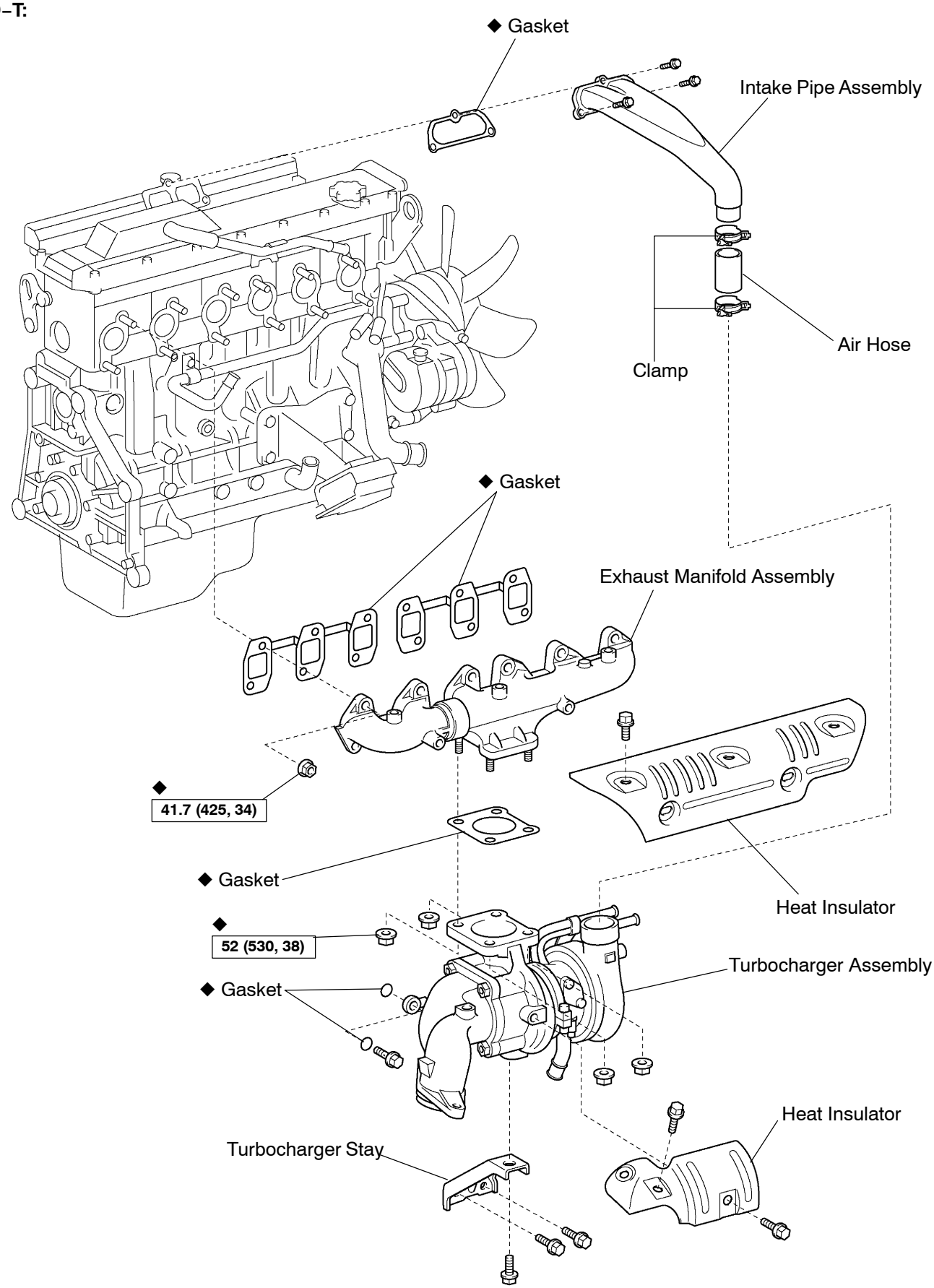

N·m (kgf·cm, ft·lbf) : Specified torque

◆ Non–reusable part

A06210

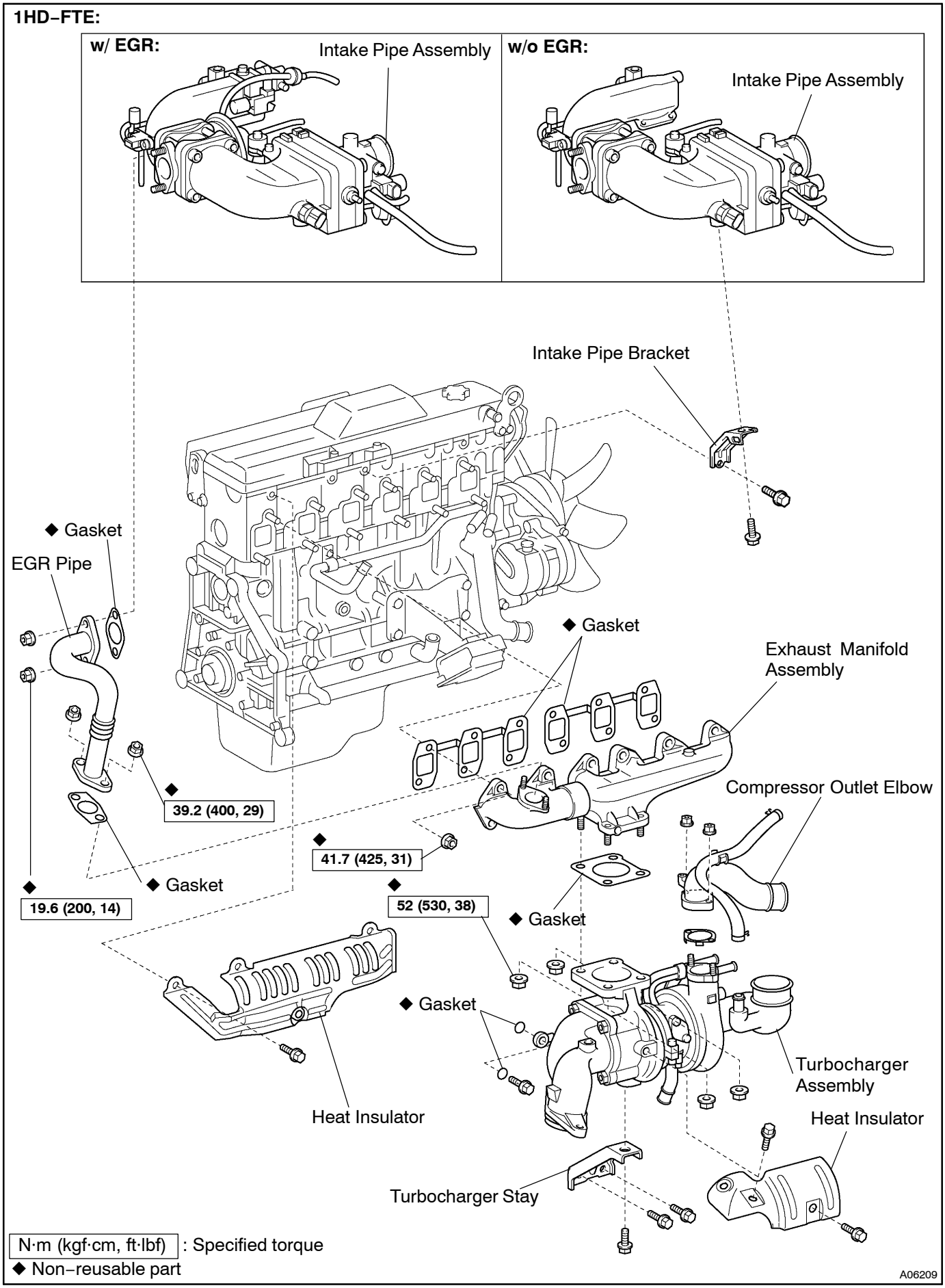
1HD–FTE:
w/ EGR:
Intake Pipe Assembly
w/o EGR:
Intake Pipe Assembly
Intake Pipe Bracket
◆ Gasket
EGR Pipe
◆ Gasket
Exhaust Manifold Assembly
◆ 39.2 (400, 29)
◆ 41.7 (425, 31)
Compressor Outlet Elbow
◆ 19.6 (200, 14)
◆ Gasket
◆ 52 (530, 38)
◆ Gasket
◆ Gasket
Turbocharger Assembly
Heat Insulator
Heat Insulator
Turbocharger Stay
N·m (kgf·cm, ft·lbf) : Specified torque
◆ Non–reusable part
A06209

1HD–T:

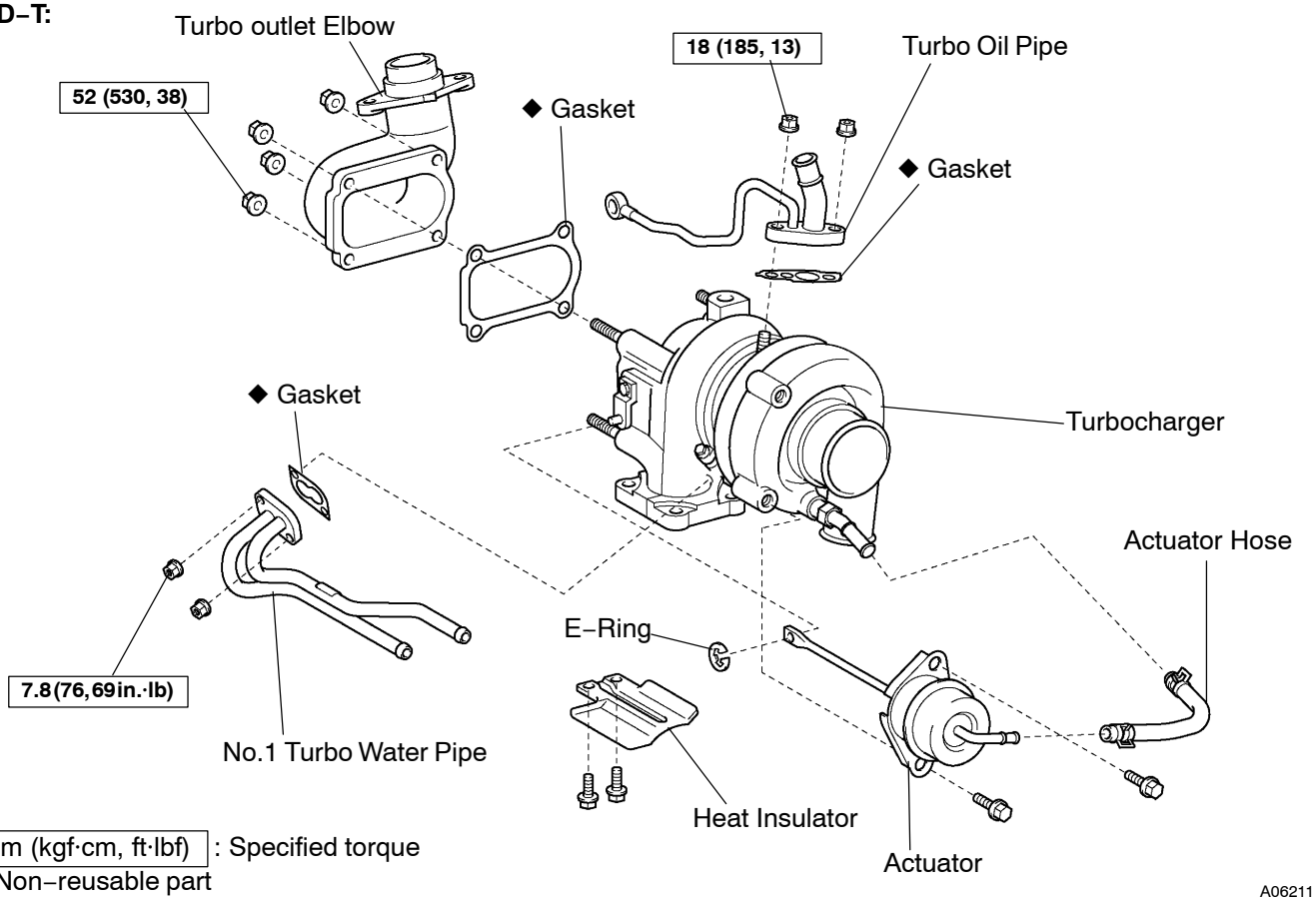

N·m (kgf·cm, ft·lbf) : Specified torque
◆ Non–reusable part

A06211

1HD–FTE:

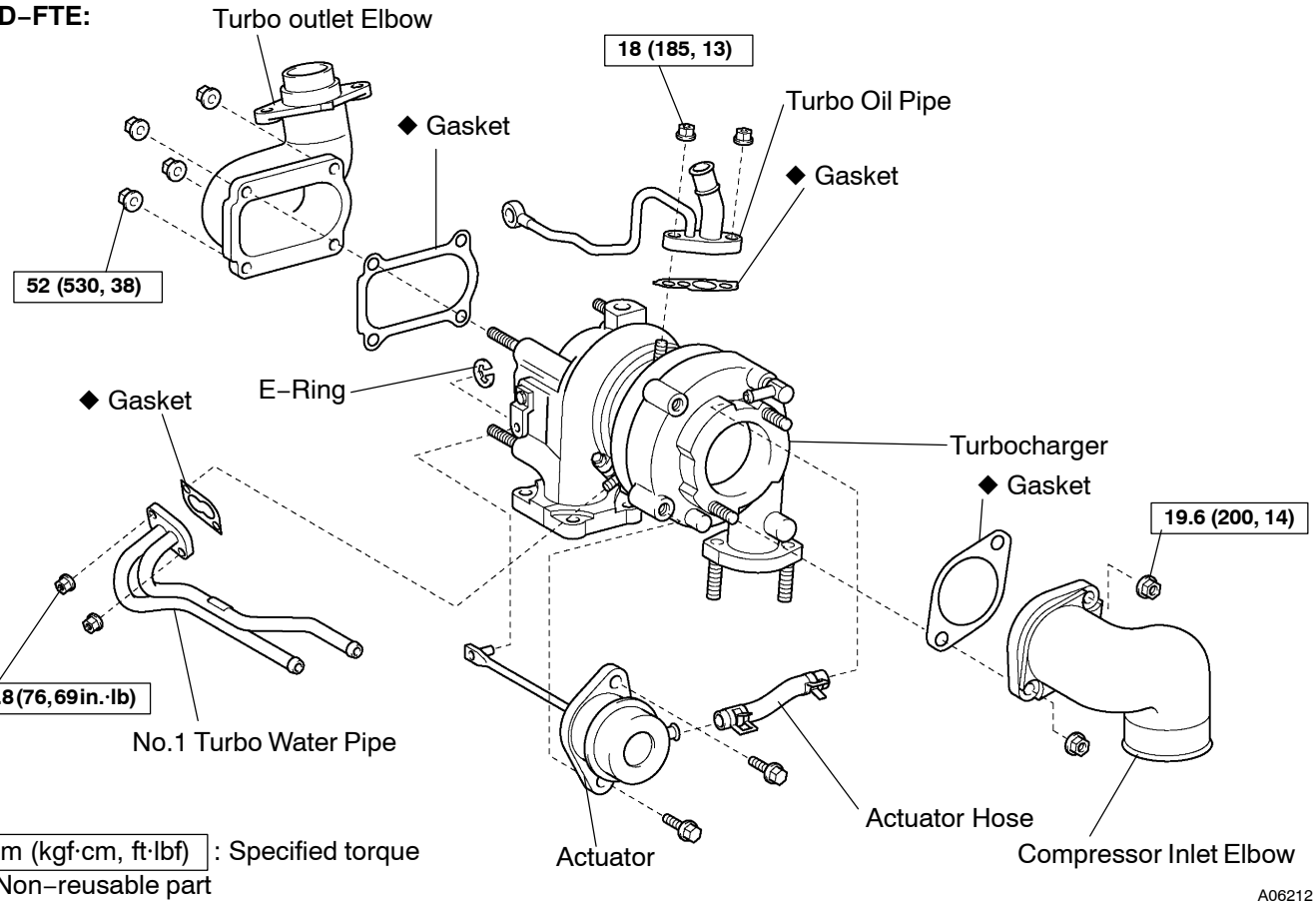

N·m (kgf·cm, ft·lbf) : Specified torque
◆ Non–reusable part

A06212