TC029–01

REMOVAL

1. **DRAIN ENGINE COOLANT**
2. **REMOVE INTAKE PIPE ASSEMBLY**
   1HD–T: (See page EM–48)
   1HD–FTE: (See page EM–77)

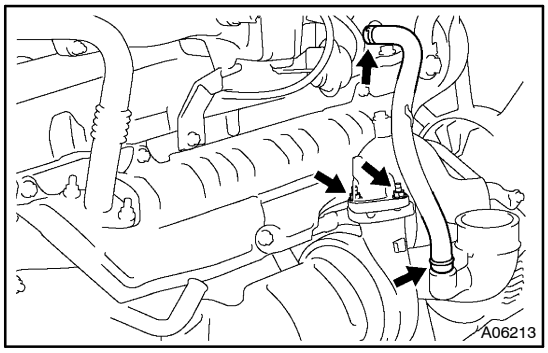

3. **1HD–FTE:**
   REMOVE PCV HOSE AND COMPRESSOR OUTLET ELBOW

(a) Disconnect the PCV hose.
(b) Remove the 2 nuts compressor outlet elbow and gasket.

4. **REMOVE HEAT INSULATOR**

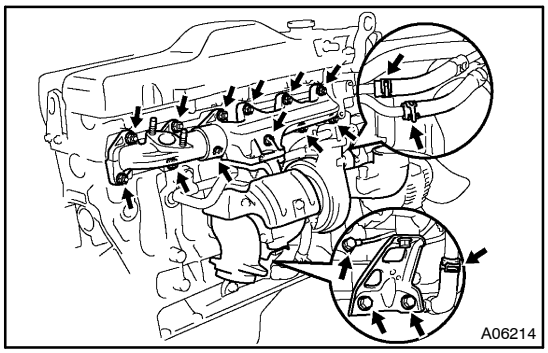

5. **REMOVE TURBOCHARGER AND EXHAUST MANIFOLDS ASSEMBLY**

(a) Remove the 3 bolts and turbocharger stay.
(b) Disconnect the turbo oil hose.
(c) Remove the union bolt and 2 gaskets holding the turbo oil pipe to the cylinder block.
(d) Disconnect the 2 water hose to the turbocharger.
(e) Remove the 12 nuts turbocharger and exhaust manifolds assembly and 2 gaskets.

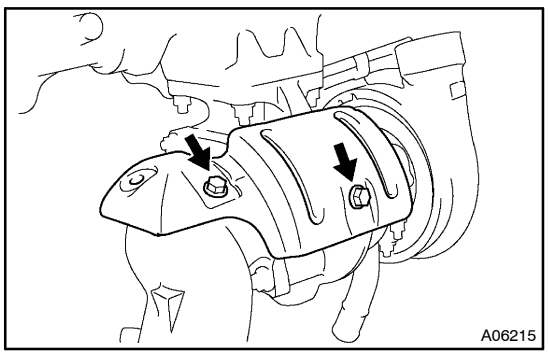

6. **REMOVE HEAT INSULATOR**

(a) Remove the 2 bolts and the heat insulator.

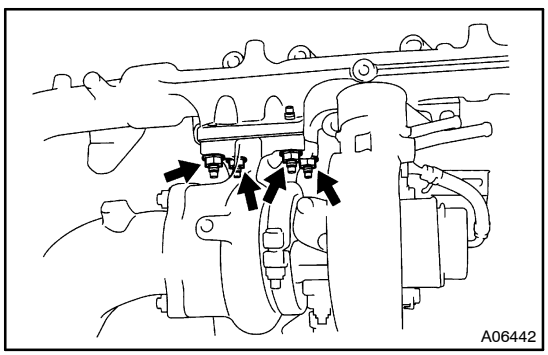

7. **REMOVE TURBOCHARGER FROM EXHAUST MANIFOLDS**

Remove the 4 nuts turbocharger and the gasket.

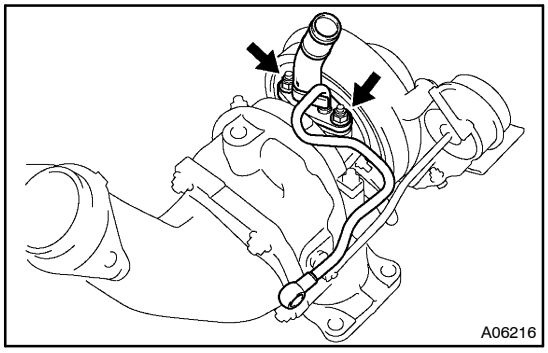

8. REMOVE OIL PIPE

Remove the 2 nuts turbo oil pipe and the gasket.

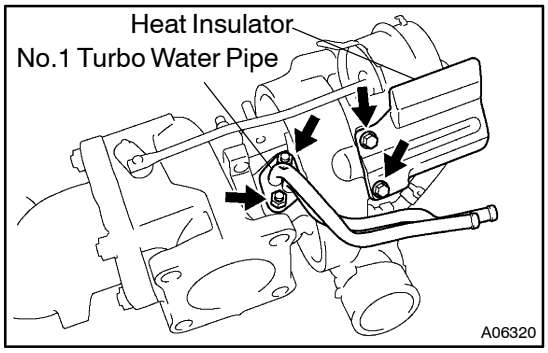

9. REMOVE NO.1 TURBO WATER PIPE

Remove the 2 nuts No.1 turbo water pipe and the gasket.

10. 1HD–T:
REMOVE HEAT INSULATOR

Remove the 2 bolts and the heat insulator.

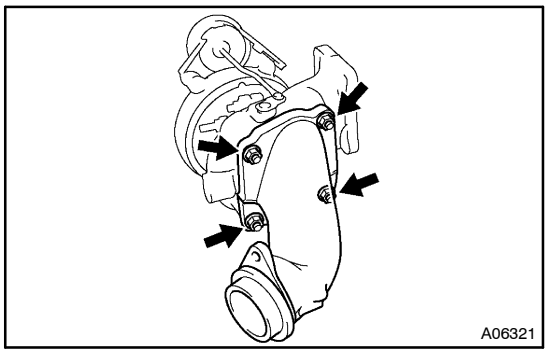

11. REMOVE TURBO OUTLET ELBOW

Remove the 4 nuts turbo outlet elbow and gasket.

1HD–FTE:

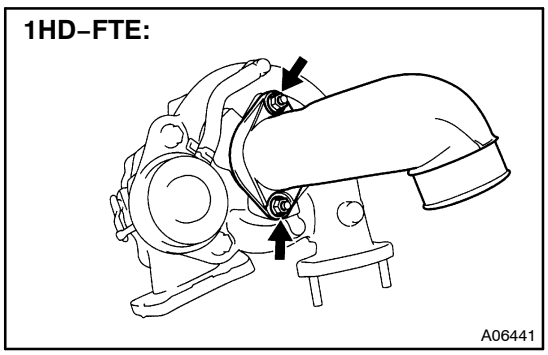

12. 1HD–FTE:
REMOVE COMPRESSOR INLET ELBOW

Remove the 2 nuts compressor inlet elbow and gasket.