TC02B–01

REPLACEMENT

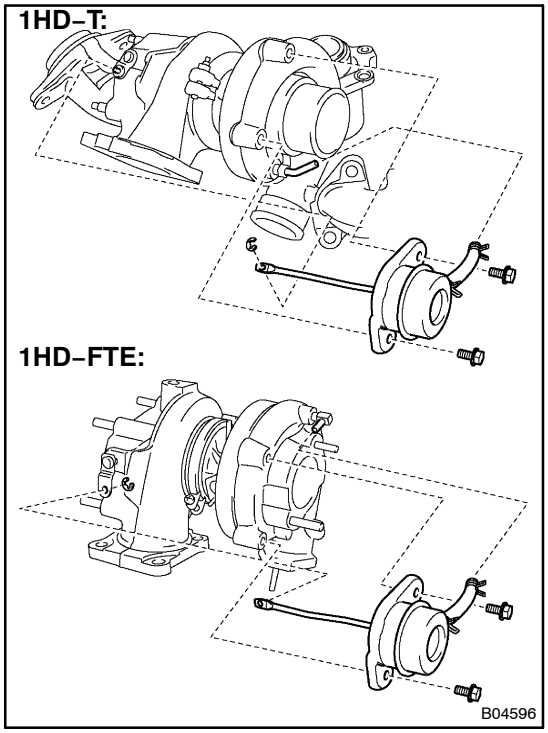

1. REMOVE ACTUATOR

(a) Remove the actuator hose.

(b) Remove the 2 bolts holding the actuator to the compressor hosing.

(c) Remove the E–ring holding the actuator push rod to the waste gate valve link, and remove the actuator.

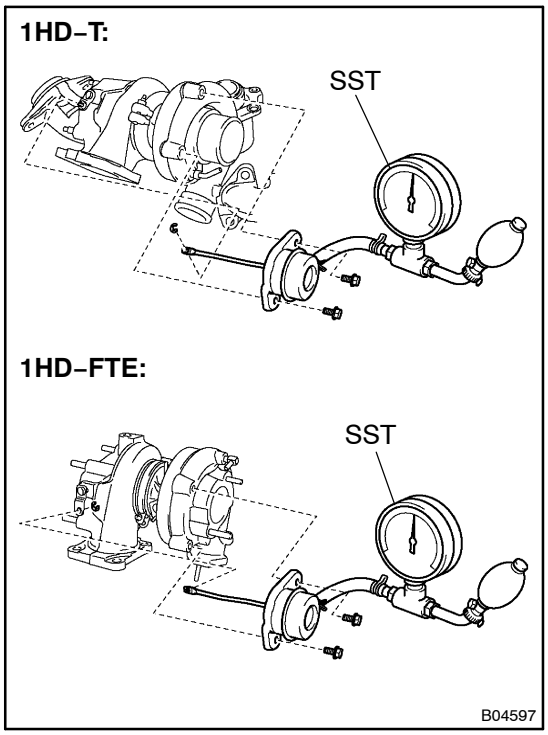

2. INSTALL ACTUATOR

(a) Using SST, apply approx. 1HD–T: 92.7 kPa (0.94 kgf/cm^2, 13.4 psi) 1HD–FTE: 114.0 kPa (1.16 kgf/cm^2, 16.5 psi) of pressure to a new actuator.
SST 09992–00242

(b) Connect the actuator push rod to the waste gate valve link with a new E–ring.

(c) Install the actuator to the compressor housing with the 2 bolts.
Torque: 19 N·m (195 kgf·cm, 14 ft·lbf)

(d) Remove SST

NOTICE:

- **Never apply more than 1HD–T: 111.0 kPa (1.13 kgf/cm^2, 16.1 psi) 1HD–FTE: 145.5 kPa (1.48 kgf/cm^2, 21.1 psi) of pressure to the actuator.**
- **Do not use a hammer, etc. to force the actuator push rod on to the waste gate valve link.**

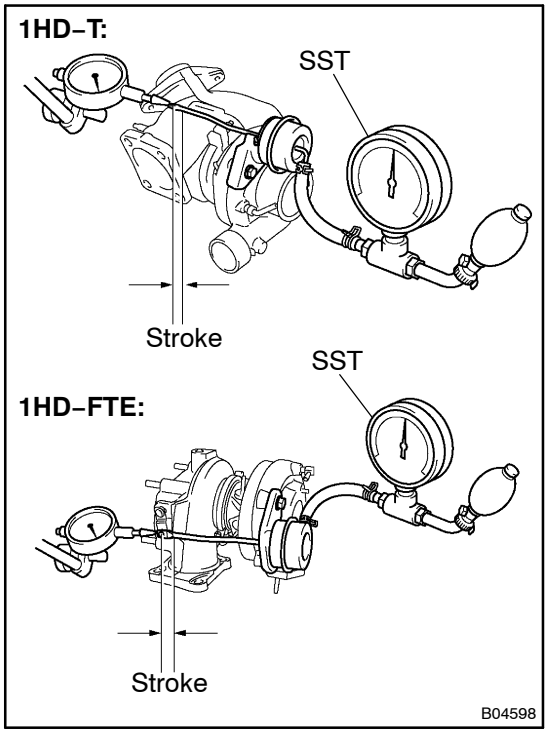

3. ADJUST ACTUATOR ROD STROKE

NOTICE:

Never apply more than 1HD–T: 111.0 kPa (1.13 kgf/cm^2, 16.1 psi) 1HD–FTE: 145.5 kPa (1.48 kgf/cm^2, 21.1 psi) of pressure to the actuator.

(a) Using a dial indicator, set the dial indicator in a straight line with the actuator push rod.

(b) Using SST, apply 1HD–T: 92.7 kPa (0.94 kgf/cm^2, 13.4 psi) 1HD–FTE: 114.0 kPa (1.16 kgf/cm^2, 16.5 psi) of pressure to the actuator, and measure the actuator push rod stroke.

SST 09992–00242

(c) From the table below select the plate washer thickness to match the stroke measured in (b) above.

1HD–T: Stroke measurement mm (in.)	1HD–FTE: Stroke measurement mm (in.)	Required plate washer thickness mm (in.)
1.20 – 1.70 (0.0472 – 0.0670)	0.72 – 1.22 (0.0283 – 0.0480)	None required
1.71 – 2.20 (0.0671 – 0.866)	1.23 – 1.72 (0.0481 – 0.0677)	0.5 (0.020)
2.21 – 2.70 (0.867 – 0.1063)	1.73 – 2.22 (0.0678 – 0.0874)	1.0 (0.039)
2.71 – 3.20 (0.1064 – 0.1260)	2.23 – 2.72 (0.0875 – 0.1071)	1.5 (0.059)
3.21 – 3.70 (0.1261 – 0.1457)	2.73 – 3.22 (0.1072 – 0.1268)	2.0 (0.079)
3.71 – 4.20 (0.1458 – 0.1654)	3.23 – 3.72 (0.1269 – 0.1465)	2.5 (0.098)
4.21 – 4.70 (0.1655 – 0.1850)	3.73 – 4.22 (0.1466 – 0.1661)	3.0 (0.118)
4.71 – 5.20 (0.1850 – 0.2047)	4.23 – 4.72 (0.1662 – 0.1858)	3.5 (0.138)
5.21 – 5.70 (0.2048 – 0.2244)	4.73 – 5.22 (0.1859 – 0.2055)	4.0 (0.157)
5.71 – 6.20 (0.2245 – 0.2441)	5.23 – 5.72 (0.2056 – 0.2252)	4.5 (0.177)
6.21 – 6.70 (0.2442 – 0.2638)	5.73 – 6.22 (0.2253 – 0.2449)	5.0 (0.197)
6.71 – 7.20 (0.2639 – 0.2827)	6.23 – 6.72 (0.2450 – 0.2646)	5.5 (0.217)
7.21 – 7.70 (0.2828 – 0.3031)	6.73 – 7.22 (0.2647 – 0.2843)	6.0 (0.236)
7.71 – 8.20 (0.3032 – 0.3228)	7.23 – 7.72 (0.2844 – 0.3039)	6.5 (0.256)

NOTICE:

- **Use a combination of plate washers of 0.5 mm (0.020 in.), 1.0 mm (0.039 in.), 2.0 mm (0.079 in.) and 3.0 mm (0.118 in.) thickness to a chive the required thickness.**
- **Use the same thickness of plate washer for the 2 locations between the actuator and compressor housing.**
- **If the plate washer thickness exceeds 3.5 mm (0.138 in.) replace the actuator installation bolts with the bolts from the kit part.**

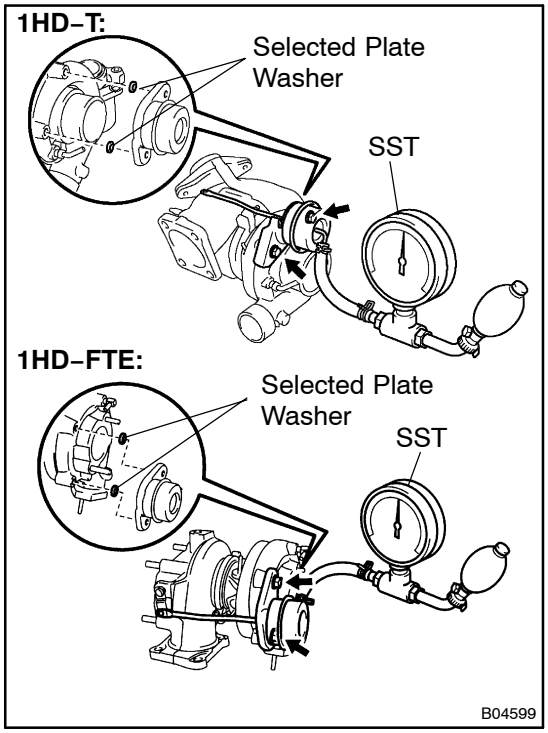

(d) Using SST, apply approx. 1HD–T: 92.7 kPa (0.94 kgf/cm^2, 13.4 psi) IHD–FTE: 114.0 kPa (1.16 kgf/cm^2, 16.5 psi) of pressure to the actuator and install the selected plate washers between the actuator and compressor housing with the 2 bolts.

Torque: 19 N·m (195 kgf·cm, 14 ft·lbf)

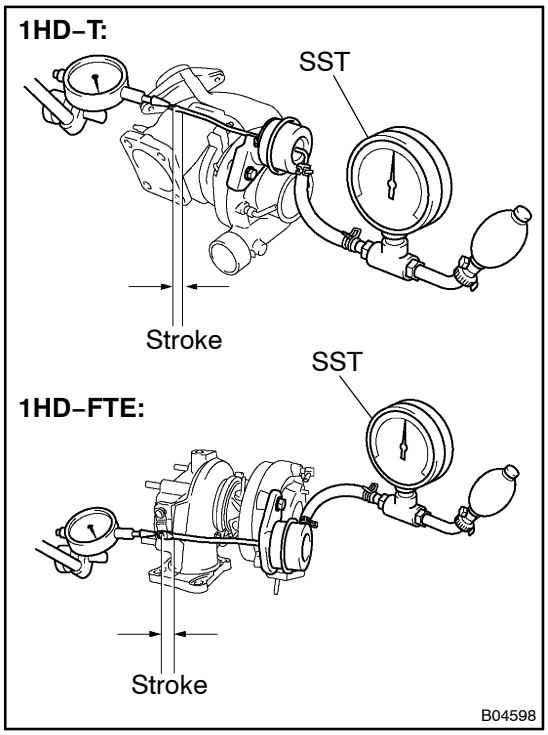

(e) Using SST, apply 1HD–T: 92.7 kPa (0.94 kgf/cm^2, 13.4 psi) IHD–FTE: 114.0 kPa (1.16 kgf/cm^2, 16.5 psi) of pressure to the actuator, and measure the actuator push rod stroke.

SST 09992–00242

Standard stroke:

1HD–T: 1.20 – 1.70 mm (0.0472 – 0.0669 in.)

1HD–FTE: 0.72 – 1.22 mm (0.0283 – 0.0480 in.)

If the stroke is outside specifications, reselect the plate washers.

4. INSTALL ACTUATOR HOSE

5. APPLY YELLOW PAINT

Apply yellow paint from the actuator bolts to the actuator bracket to indicate that they have been correctly in stalled.

6. CHECK TURBOCHARGING PRESSURE

(See page TC–4)