TC02C–01

INSTALLATION

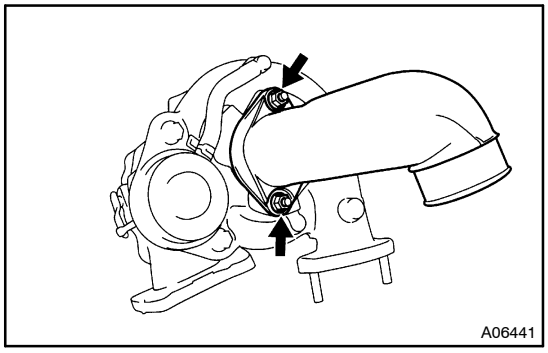

1. 1HD–FTE:
INSTALL COMPRESSOR INLET ELBOW

Install the gasket, compressor inlet elbow and the 2 new nuts.

Torque:19 N·m (195 kgf·cm, 14 ft·lbf)

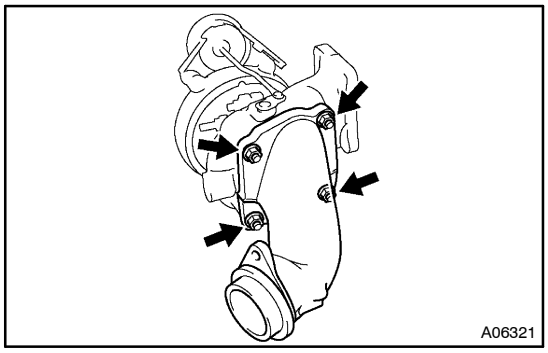

2. INSTALL TURBO OUTLET ELBOW

Install the new gasket, turbo outlet and the 4 nuts.

Torque:39 N·m (390 kgf·cm, 28 ft·lbf)

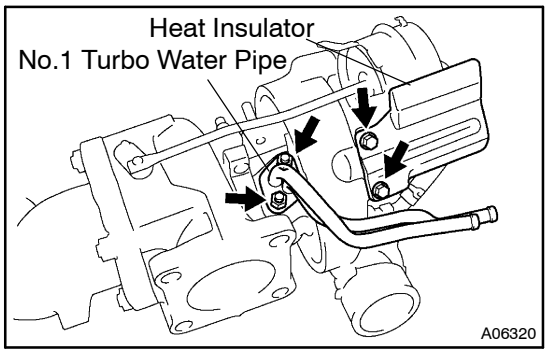

3. 1HD–T:
INSTALL HEAT INSULATOR

Install the heat insulator and the 2 bolts.

4. REMOVE NO.1 TURBO WATER PIPE

Install the new gasket, No.1 turbo water pipe and the 2 nuts.

Torque:19 N·m (195 kgf·cm, 14 ft·lbf)

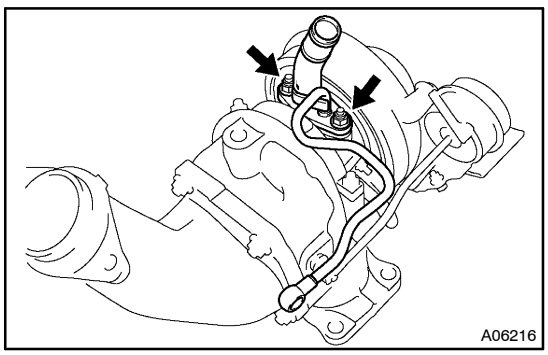

5. INSTALL OIL PIPE

Install the new gasket, turbo oil pipe and the 2 nuts.

Torque:19 N·m (195 kgf·cm, 14 ft·lbf)

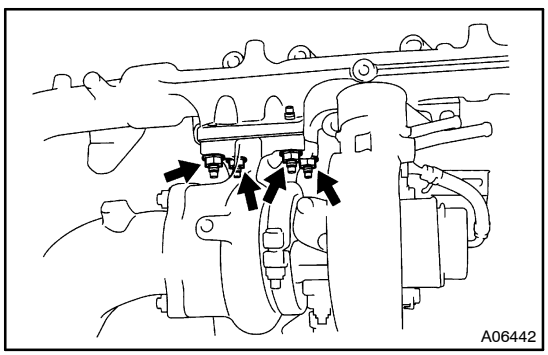

6. INSTALL TURBOCHARGER TO EXHAUST MANIFOLDS

Install the new gasket, turbocharger and the 4 nuts.

Torque:52 N·m (530 kgf·cm, 38 ft·lbf)

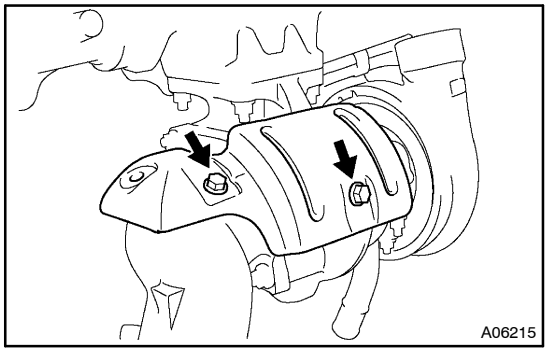

7. INSTALL HEAT INSULATOR

Install the heat insulator and the 2 bolts.

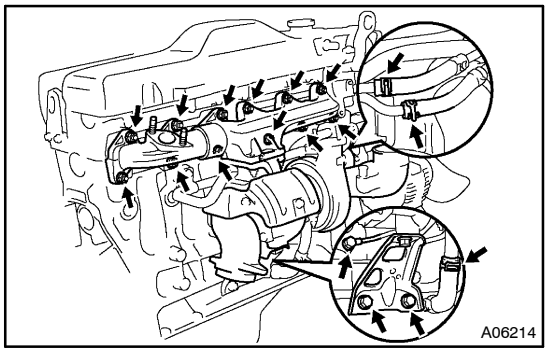

8. INSTALL TURBOCHARGER AND EXHAUST MANIFOLDS ASSEMBLY

(a) Install the 2 new gaskets, turbocharger and exhaust manifolds assembly and the 12 nuts.

Torque:41.7 N·m (425 kgf·cm, 31 ft·lbf)

(b) Connect the 2 water hose from the turbocharger.

(c) Install the 2 new gasket and the union bolt of the turbo oil pipe.

(d) Connect the turbo oil hose.

(e) Install the turbocharger stay and the 3 bolts.

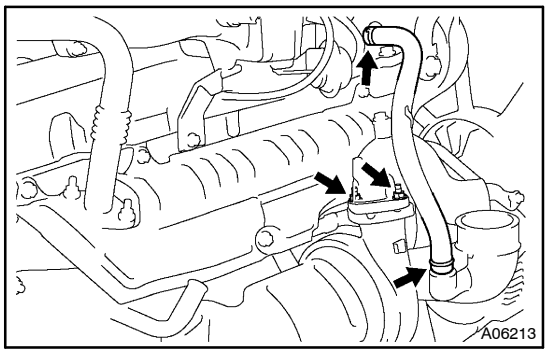

9. 1HD–FTE:
INSTALL PCV HOSE AND COMPRESSOR OUTLET ELBOW

(a) Install the new gasket, compressor outlet elbow and the 2 nuts.

(b) Connect the PCV hose

10. INSTALL HEAT INSULATOR

11. INSTALL INLET PIPE ASSEMBLY

1HD–T: (See page EM–66)

1HD–FTE: (See page EM–94)

12. FILL WITH ENGINE COOLANT

13. START ENGINE AND CHECK FOR LEAK

14. CHECK ENGINE OIL LEVEL