FRONT BUMPER

COMPONENTS

BO2ZS–01

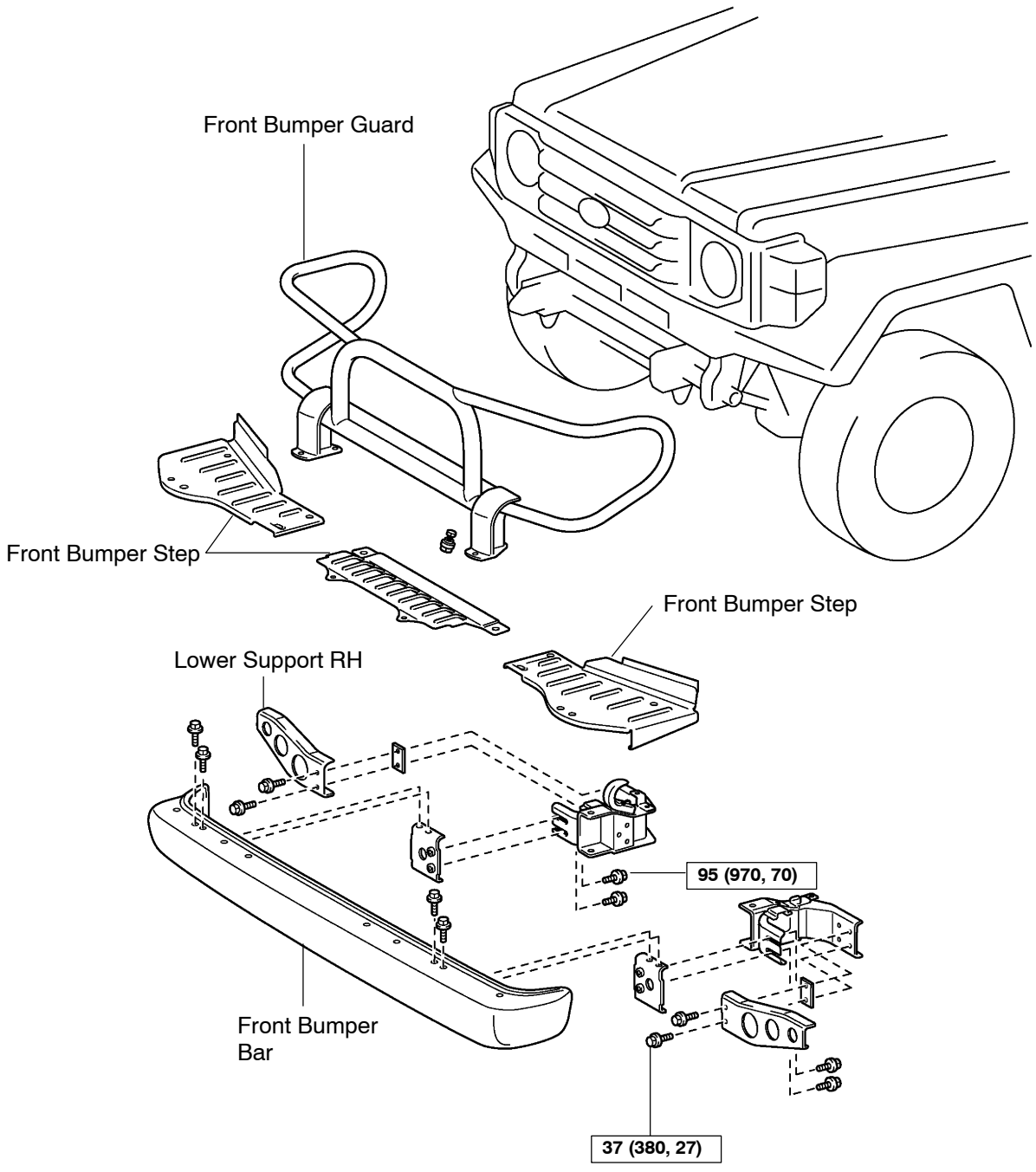

T

N·m (kgf·cm, ft·lbf) : Specified torque

H12747