BO2ZU–01

DISASSEMBLY

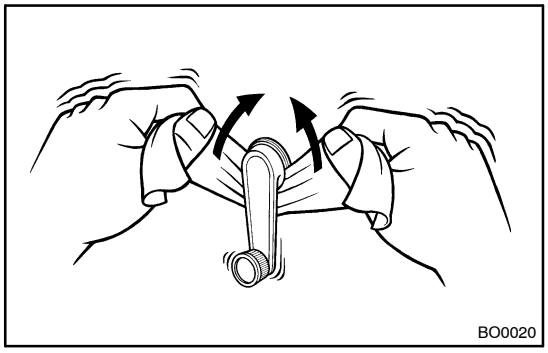

1. w/o Power window:
REMOVE REGULATOR HANDLE

Pull off the snap ring with a cloth and remove the regulator handle and plate.

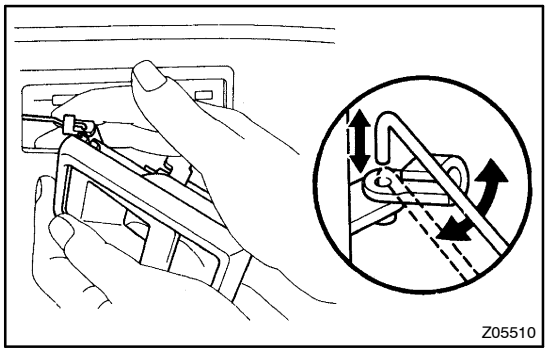

2. REMOVE DOOR INSIDE HANDLE

(a) Remove the screw and slide the handle forward.
(b) Disconnect the handle from the control link and remove the handle.

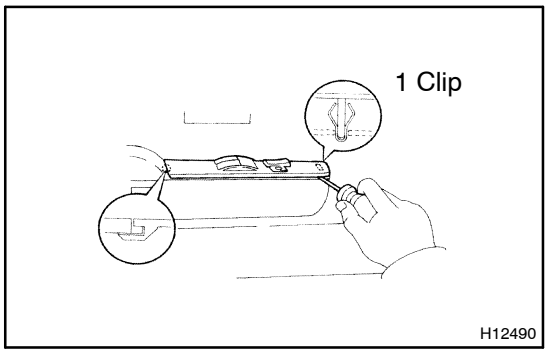

3. w/ Power window:
REMOVE ARMREST PANEL BASE UPPER

(a) Insert the screwdriver between the armrest and the armrest panel to pry out.

HINT:
Tape the screwdriver tip before use.

(b) Slide the armrest panel forward to remove it, then disconnect the connector.

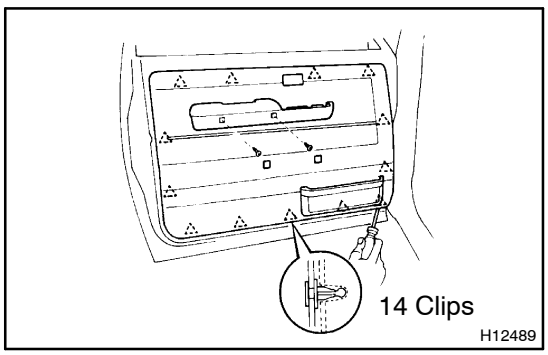

4. REMOVE DOOR TRIM

(a) w/o Power window:
Remove 2 screws and the armrest or remove 2 caps and remove the pull handle with 2 screws.
(b) w/ Power window:
Remove 2 caps and 2 screws from the armrest.
(c) w/ Canvas top:
Remove the screw and the service cover.
(d) Insert the screwdriver between the door and the door trim to pry out.

HINT:
Tape the screwdriver tip before use.

(e) Remove the door trim.
(f) w/ Power window:
Remove the 5 screws and the armrest from the door trim.
(g) Remove the 5 screws and the door pocket from the door trim.

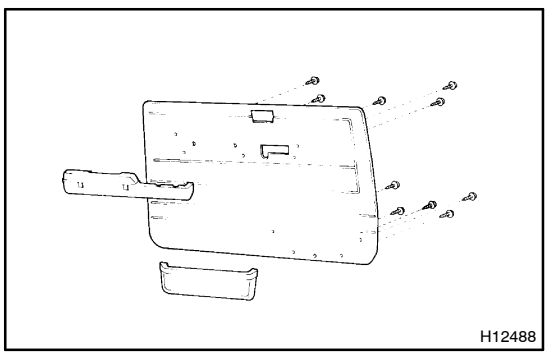

5. REMOVE OUTSIDE REAR VIEW MIRROR

Remove 2 screws and the outside rear view mirror.

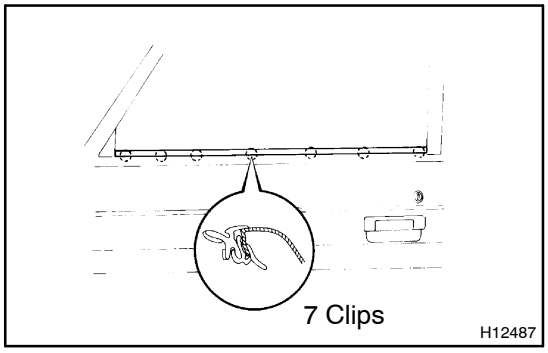

6. REMOVE OUTER WEATHERSTRIP

Pry loose the clips from the edge of the panel and remove the outer weatherstrip.

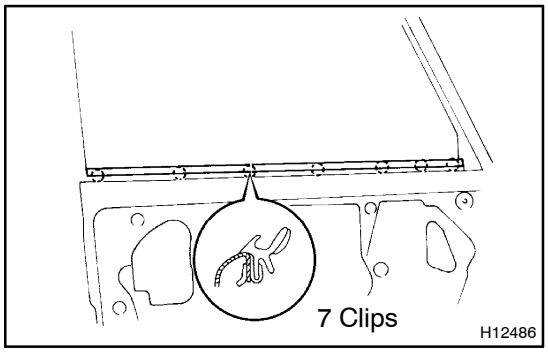

7. REMOVE INNER WEATHERSTRIP

Pry loose the clips from the edge of the panel and remove the inner weatherstrip.

8. w/ Power window:
REMOVE DOOR LOCK CONTROL RELAY

Remove 3 bolts and the door lock control relay.

9. REMOVE SERVICE HOLE COVER

NOTICE:

Do not tear the service hole cover.

10. REMOVE GLASS RUN

11. w/o Ventilator window:
REMOVE FRONT LOWER FRAME

(a) w/ Canvas top:
Remove 2 bolts and the front lower frame.

(b) w/o Canvas top:
Remove 2 screws, 2 bolts and the front lower frame.

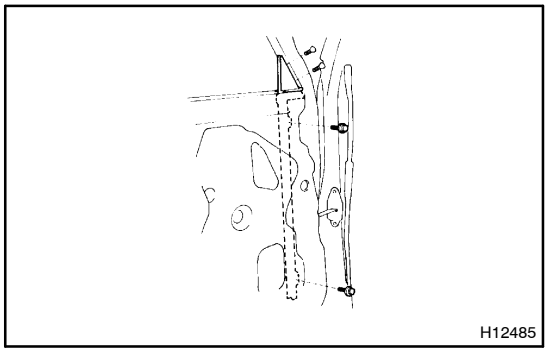

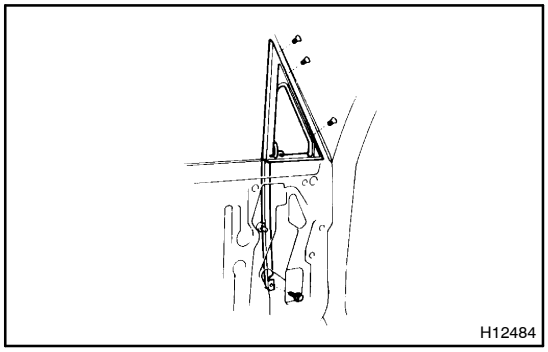

12. w/ Ventilator window:
REMOVE VENTILATOR WINDOW

(a) Remove 3 screws and the bolt.

(b) Remove the ventilator window by pulling it upward.

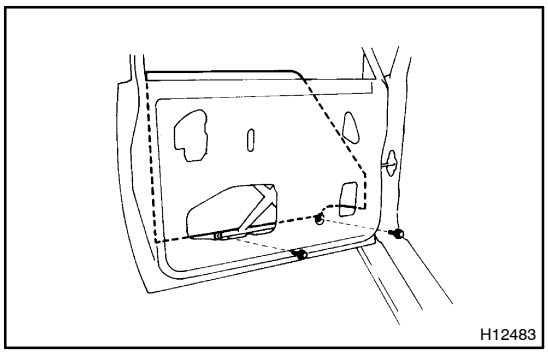

13. REMOVE DOOR GLASS

(a) Remove 2 glass channel mounting bolts.

(b) Remove the door glass by pulling it upward.

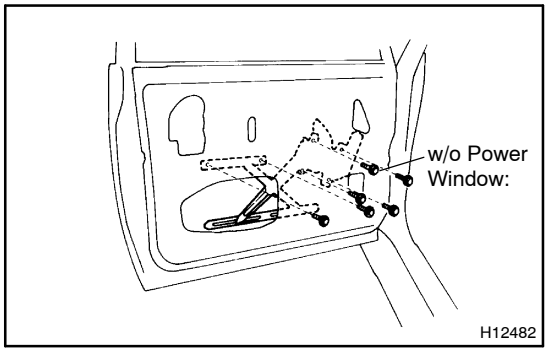

14. REMOVE WINDOW REGULATOR

(a) w/o Ventilator window:
Remove 2 equalizer arm bracket mounting bolts.

(b) w/ Power window:
Remove 4 regulator mounting bolts, then disconnect the connector.

(c) w/o Power window:
Remove 3 regulator mounting bolts.

(d) Remove the regulator through the service hole.

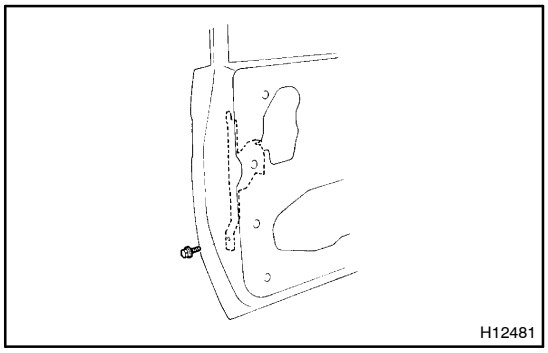

15. REMOVE REAR LOWER FRAME

Remove the bolt and the rear lower frame.

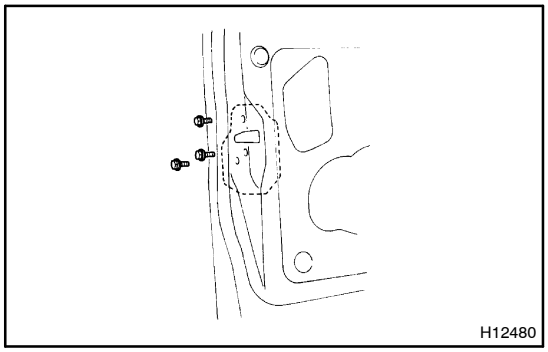

16. REMOVE DOOR LOCK

(a) Disconnect the links from the outside handle and the lock cylinder.

(b) Remove the lock knob.

(c) w/ Power door lock:
Disconnect the connector.

(d) Remove 3 screws.

(e) Remove the door lock through the service hole.

17. REMOVE DOOR LOCK CYLINDER

Remove the retainer and the lock cylinder.

18. REMOVE OUTSIDE HANDLE

Remove 2 bolts and the outside handle.

