BO2ZV–01

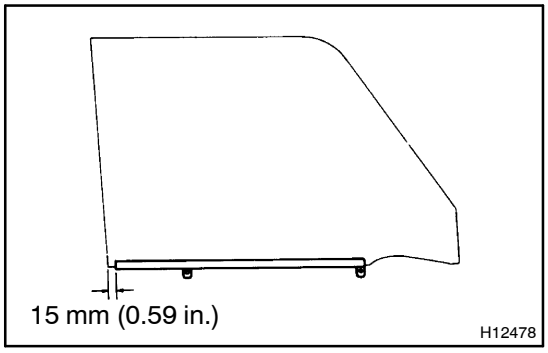

REPLACEMENT

1. **REMOVE GLASS CHANNEL WITH SCREWDRIVER OR LIKE OBJECT**
2. **APPLY SOAPY WATER TO INSIDE OF WEATHERSTRIP**
3. **INSTALL CHANNEL BY TAPPING IT WITH PLASTIC HAMMER**