BO2ZZ–01

DISASSEMBLY

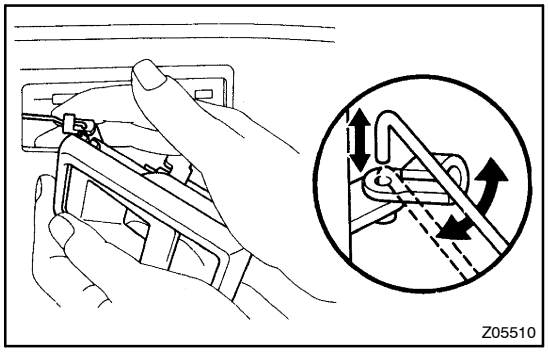

1. REMOVE DOOR INSIDE HANDLE

(a) Remove the screw and slide the inside handle forward.

(b) Disconnect the inside handle from the control link and remove the inside handle.

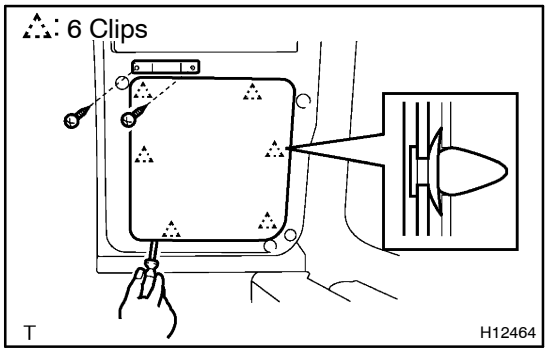

2. REMOVE PULL HANDLE

Remove 2 screws and the pull handle.

3. REMOVE DOOR TRIM

(a) Insert the screwdriver between the door and the door trim to pry out.

HINT:

Tape the screwdriver tip before use.

(b) Remove the door trim.

4. REMOVE SERVICE HOLE COVER

NOTICE:

Do not tear the service hole cover.

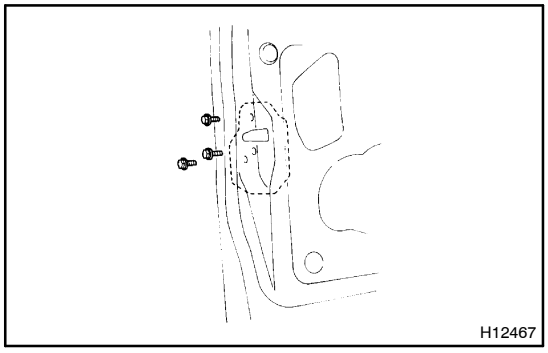

5. REMOVE DOOR LOCK

(a) Disconnect the links from the outside handle and the lock cylinder.

(b) Remove the lock knob.

(c) w/ Power door lock:
Disconnect the connector.

(d) Remove 3 screws.

(e) Remove the door lock through the service hole.

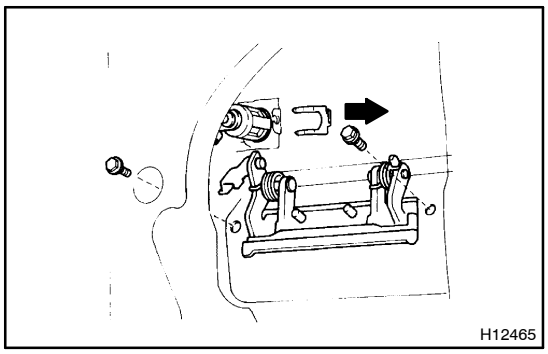

6. REMOVE DOOR LOCK CYLINDER

Remove the retainer and the lock cylinder.

7. REMOVE OUTSIDE HANDLE

Remove 2 bolts and the outside handle.