BO301–01

REASSEMBLY

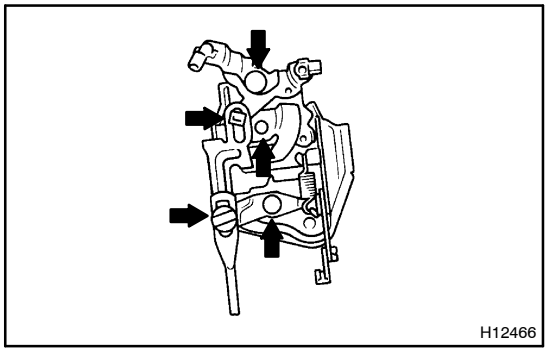

1. BEFORE INSTALLING PARTS, COAT THEM WITH MP GREASE

Apply MP grease to the sliding surface of the door lock.

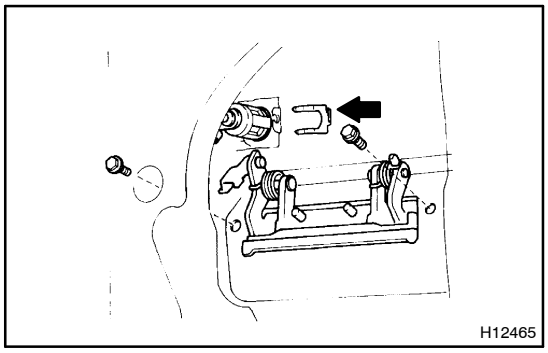

2. INSTALL OUTSIDE HANDLE

Install the outside handle with 2 bolts.

3. INSTALL DOOR LOCK CYLINDER

Install the lock cylinder with the retainer.

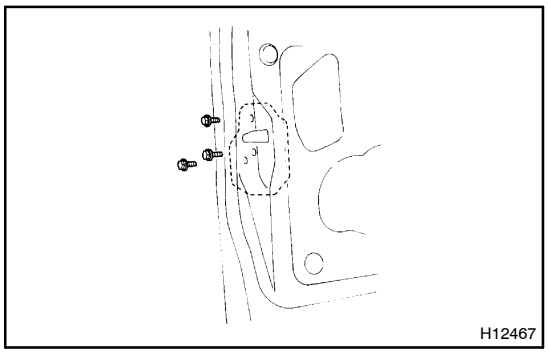

4. INSTALL DOOR LOCK

(a) Install the door lock with 3 screws.

(b) w/ Power Door Lock:
Connect the connector.

(c) Connect the links to the outside handle and the lock cylinder.

(d) Install the lock knob.

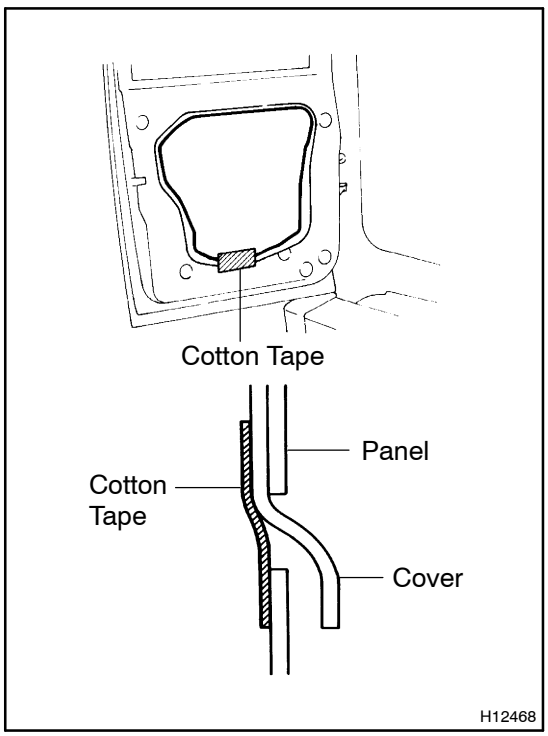

5. INSTALL SERVICE HOLE COVER

(a) Install the service hole cover with adhesive.

(b) Insert the lower edge of the service hole cover into the panel slit.

(c) Seal the panel slit with the cotton tape.

NOTICE:

Do not block the trim clip sealing with the tape.

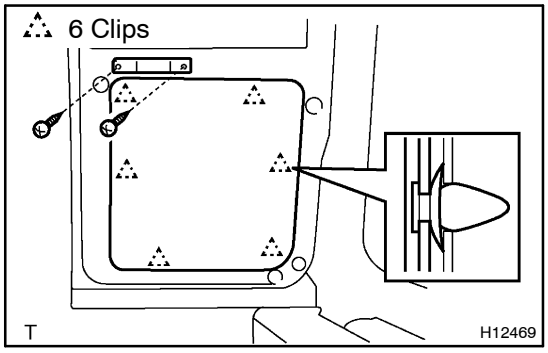

6. INSTALL DOOR TRIM

Install the door trim with retainer to the inside panel by tapping.

7. INSTALL PULL HANDLE

Install the pull handle with 2 screws.

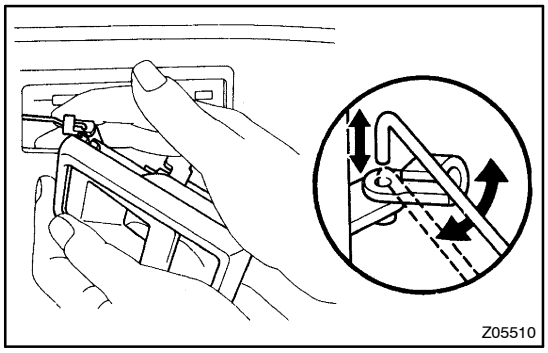

8. INSTALL DOOR INSIDE HANDLE

(a) Connect the inside handle to the control link.

(b) Push the inside handle in the door panel and slide it rearward.

(c) Install the screw.