BO305–01

REASSEMBLY

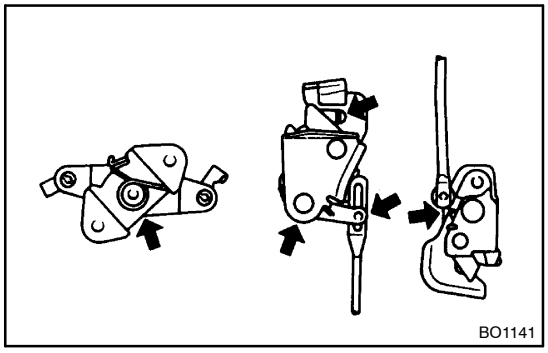

1. BEFORE INSTALLING PARTS, COAT THEM WITH MP GREASE

Apply MP grease to the sliding surface of the door lock and the door lock control.

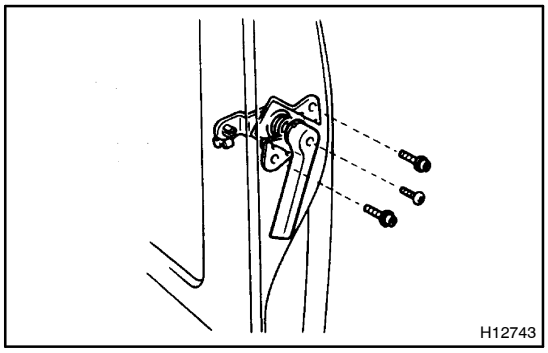

2. INSTALL DOOR LOCK CONTROL

(a) Install the door lock control with 2 screws.
(b) Install the inside handle with the screw.

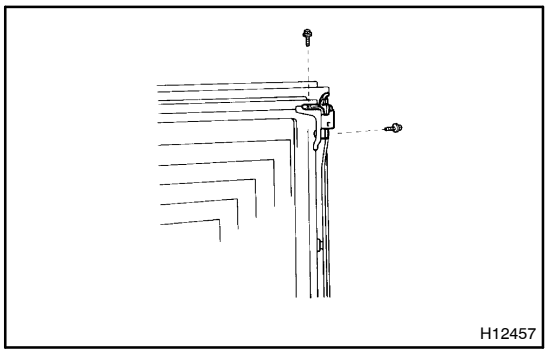

3. w/o Canvas top:
INSTALL UPPER DOOR LOCK

(a) Install the door lock with 2 bolts.
(b) Connect the link to the door lock control.

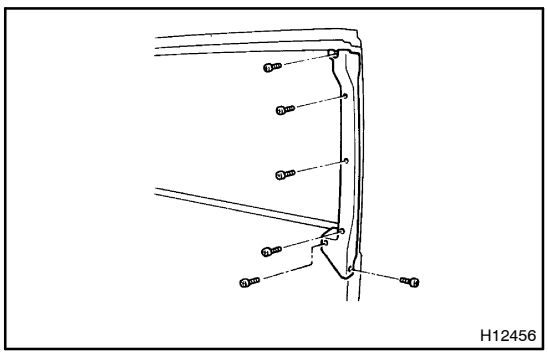

4. w/o Canvas top:
INSTALL LINK COVER

Install the link cover with 6 screws.

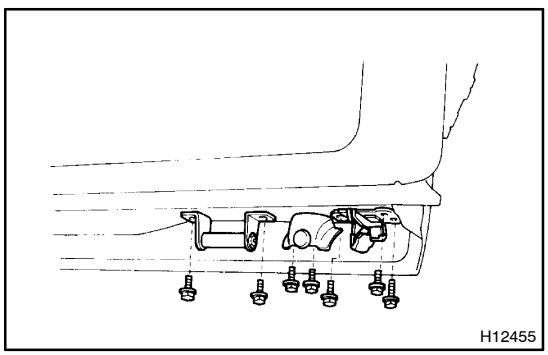

5. INSTALL LOWER DOOR LOCK

(a) Install the lower door lock with 3 bolts.
(b) Connect the link to the lower door lock control.

6. INSTALL DOOR STOPPER BRACKET

Install the door stopper bracket with 2 bolts.

7. INSTALL DOOR STOPPER

Install the door stopper with 2 bolts.

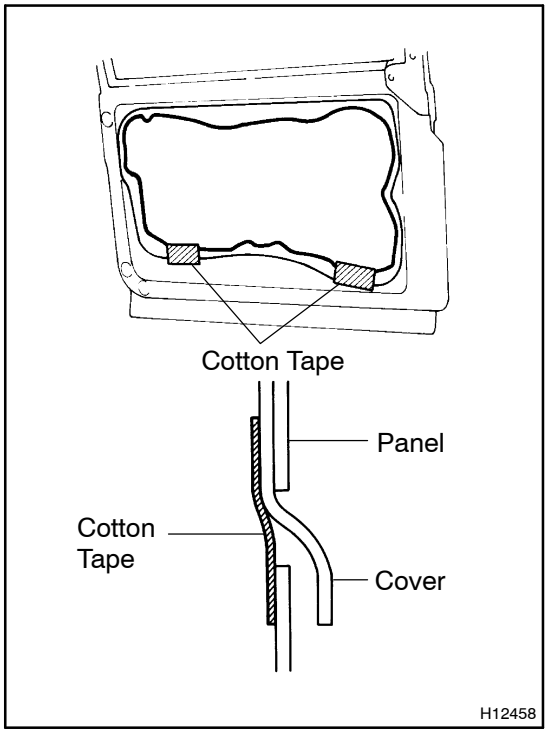

8. INSTALL SERVICE HOLE COVER

(a) Install the service hole cover with adhesive.

(b) Insert the lower edge of the service hole cover into the panel slit.

(c) Seal the panel slit with the cotton tape.

NOTICE:

Do not block the trim clip sealing with the tape.

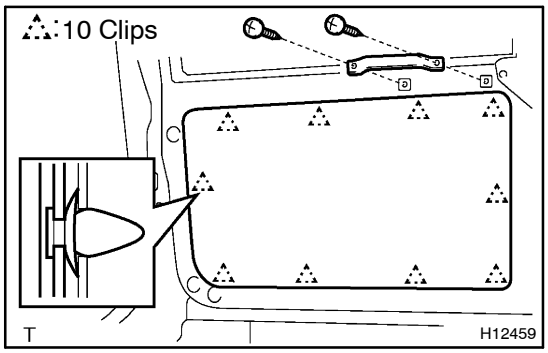

9. INSTALL DOOR TRIM

Install the door trim with retainer to the inside panel by tapping.

10. INSTALL PULL HANDLE

Install the pull handle with 2 screws.

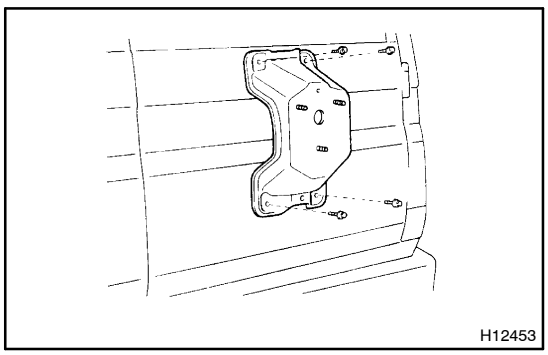

11. INSTALL SPARE WHEEL CARRIER

Install the spare wheel carrier with 4 bolts.

12. INSTALL SPARE WHEEL