BO307–01

REMOVAL

1. **DISCONNECT BATTERY CABLE FROM NEGATIVE TERMINAL**
2. **REMOVE STEERING WHEEL (See Pub. No. RM183E on page SR–4)**
3. **REMOVE STEERING COLUMN COVER**

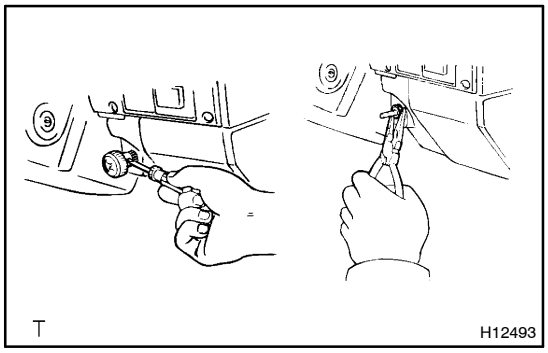

4. **REMOVE THROTTLE CABLE**

(a) Using a screwdriver, push in the throttle cable packing and pull off the knob.

(b) Remove the throttle cable set nut and the cable.

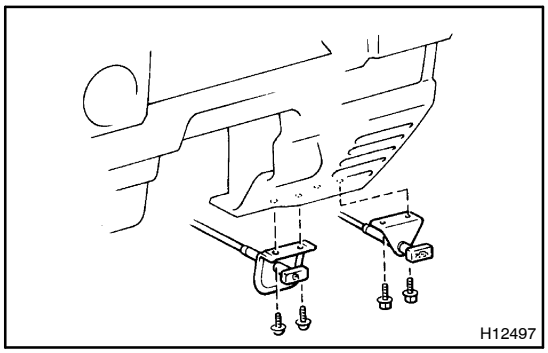

5. **REMOVE HOOD LOCK RELEASE LEVER**
6. **REMOVE FUEL LID OPENER**

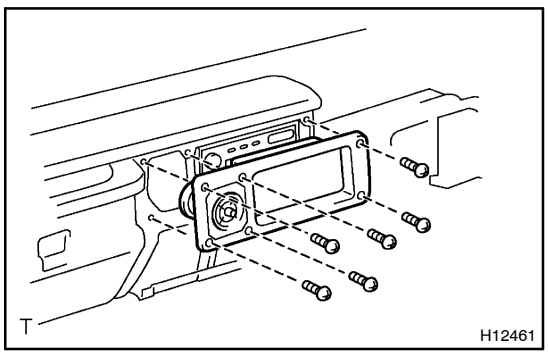

7. **REMOVE NO. 2 INSTRUMENT CLUSTER FINISH CENTER PANEL**

Remove 6 screws and the center panel.

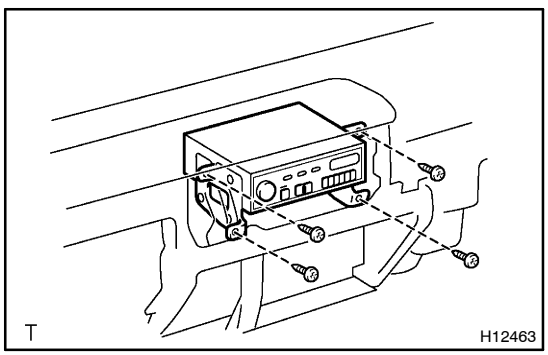

8. **REMOVE RADIO**

(a) Remove the 4 screws.

(b) Disconnect the connector and antenna cable, then remove the radio.

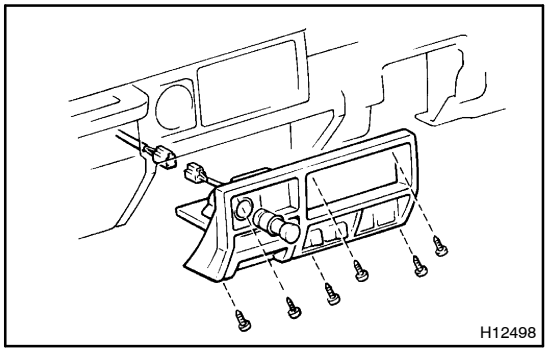

9. REMOVE NO. 1 INSTRUMENT CLUSTER FINISH CENTER PANEL

(a) Remove the 6 screws.
(b) Disconnect the connectors and remove the panel.

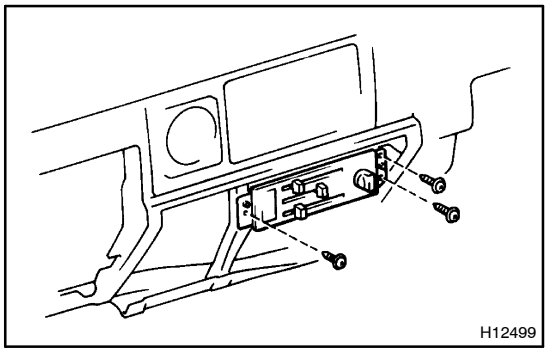

10. REMOVE HEATER CONTROL PANEL

Remove 4 knobs, 3 screws and the control panel.

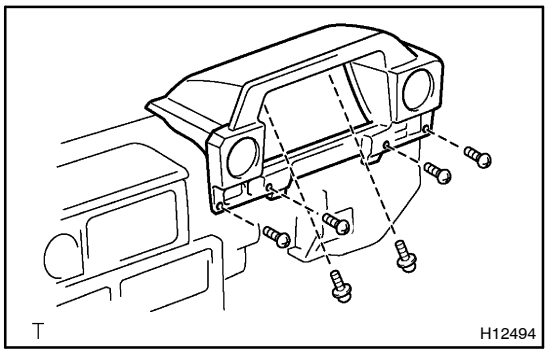

11. REMOVE INSTRUMENT CLUSTER FINISH PANEL

(a) Remove the 6 screws.
(b) Disconnect the connectors and warning valves, then remove the finish panel.

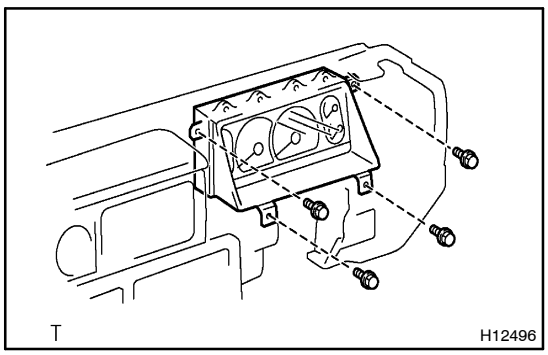

12. REMOVE COMBINATION METER

(a) Remove the 4 screws.

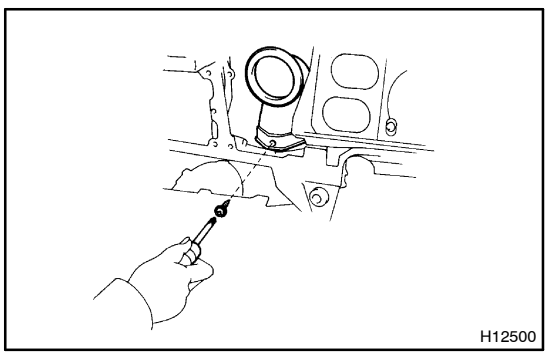

(b) Remove the No. 3 side air duct.
(c) Reach in from where the No. 3 side air duct has been removed and disconnect the speedometer cable and the 2 connectors.
(d) Remove the combination meter.

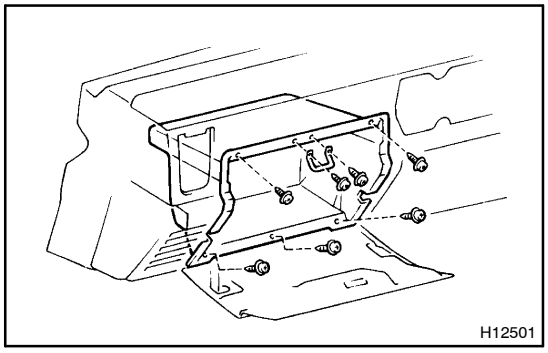

13. REMOVE GLOVE COMPARTMENT

(a) Remove the 2 screws and the door lock striker.
(b) Remove the 5 screws and the glove compartment.

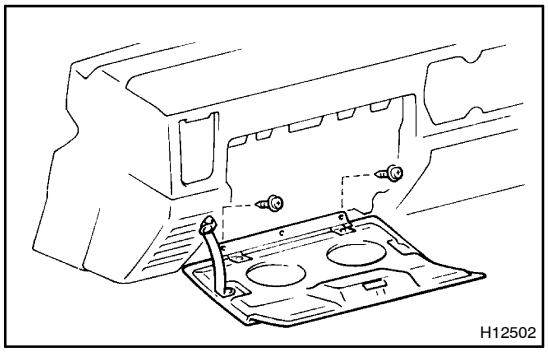

14. REMOVE GLOVE COMPARTMENT DOOR

Remove 2 screw and the door.

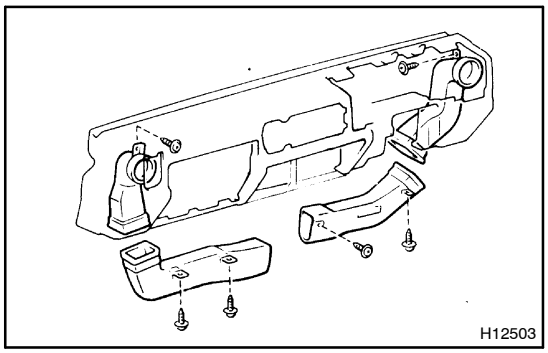

15. REMOVE SIDE AIR DUCT

HINT:
The No. 4 side air duct must be removed.

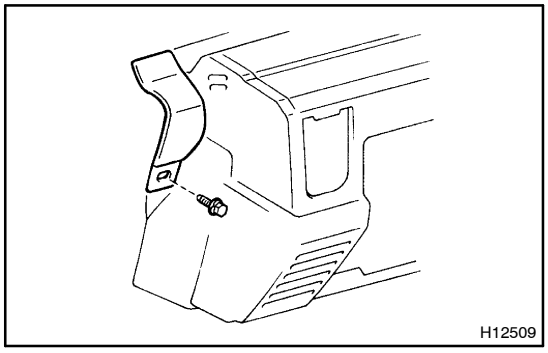

16. REMOVE BOTH INSTRUMENT PANEL PLATES

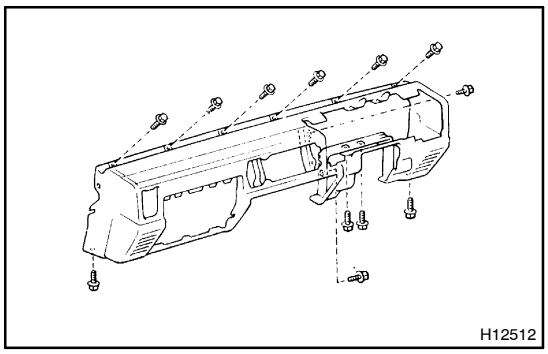

17. REMOVE INSTRUMENT PANEL

(a) Disconnect the connectors and wire harness clamps.
(b) Remove the steering column upper support.
(c) Remove the 12 bolts and the instrument panel.

18. REMOVE REINFORCEMENT

19. REMOVE INSTRUMENT PANEL TO COWL BRACE

20. REMOVE INSTRUMENT PANEL TO FLOOR BRACE