BO308–01

DISASSEMBLY

1. REMOVE INSTRUMENT PANEL SIDE REGISTER

2. REMOVE BOTH SIDE DEFROSTER DUCTS

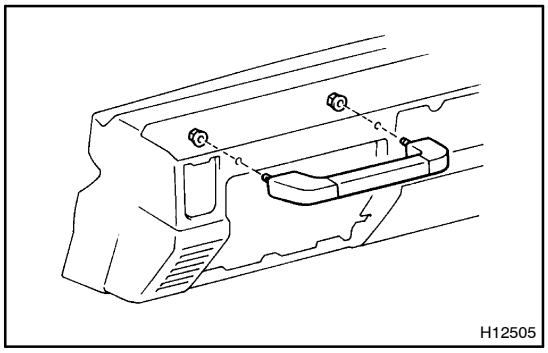

3. REMOVE ASSIST GRIP

Remove 2 nuts and the assist grip.

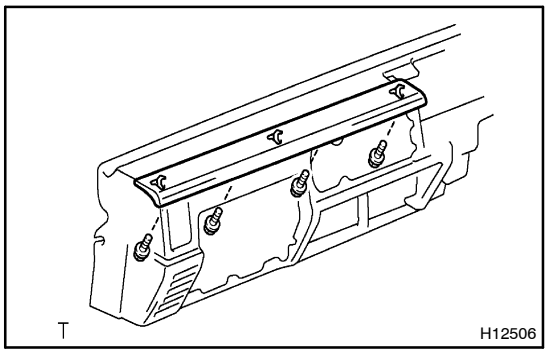

4. REMOVE SAFETY PAD

(a) Remove the 4 screws.

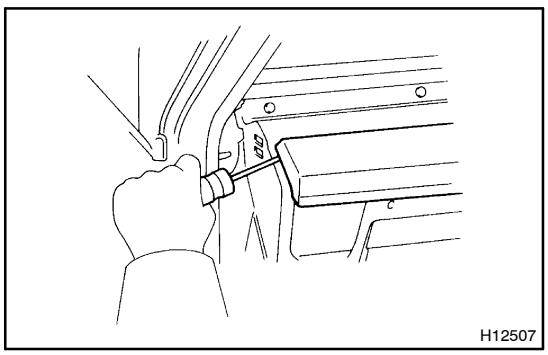

(b) Using a screwdriver, pry up the safety pad and remove it with the 3 clips.

HINT:

Tape the screwdriver tip before use.

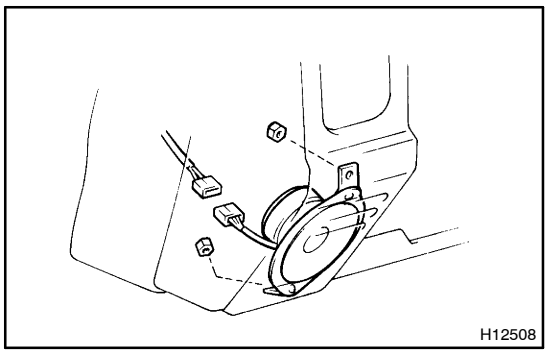

5. REMOVE BOTH SPEAKERS

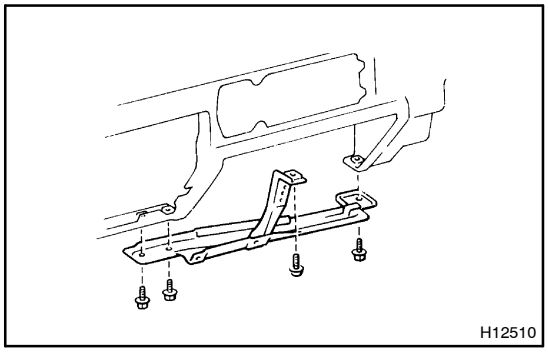

6. REMOVE INSTRUMENT CLUSTER FINISH PANEL REINFORCEMENT

(a) Remove 4 bolts and the reinforcement.
(b) Disconnect the connector.
(c) Remove the 2 nuts and the speaker.

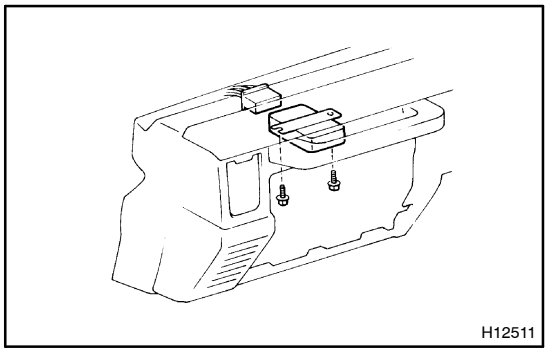

7. REMOVE FOLLOWING PARTS

(a) Europe:
Remove the following parts:
- Red hazard indicator relay
- Rear fog light relay
- Pre–heating timer (HZJ)
- Daytime running light relay

(b) Saudi Arabia:
Remove the emission control relay.
(c) Australia:
Remove the following parts:
- Emission control relay
- Preheating timer (HZJ)

(d) Remove the 3 wiring harness clamps from the instrument panel.

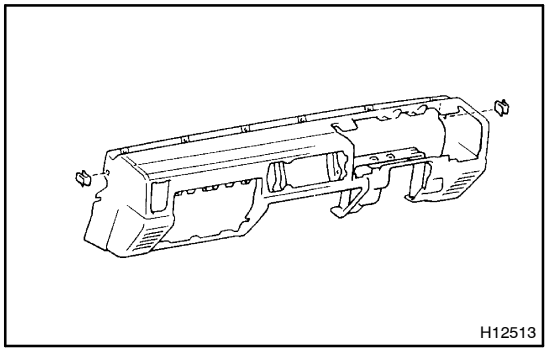

8. REMOVE 2 CLIPS FROM INSTRUMENT PANEL