SEAT BELT

COMPONENTS

BO30D–01

Front seat belt:

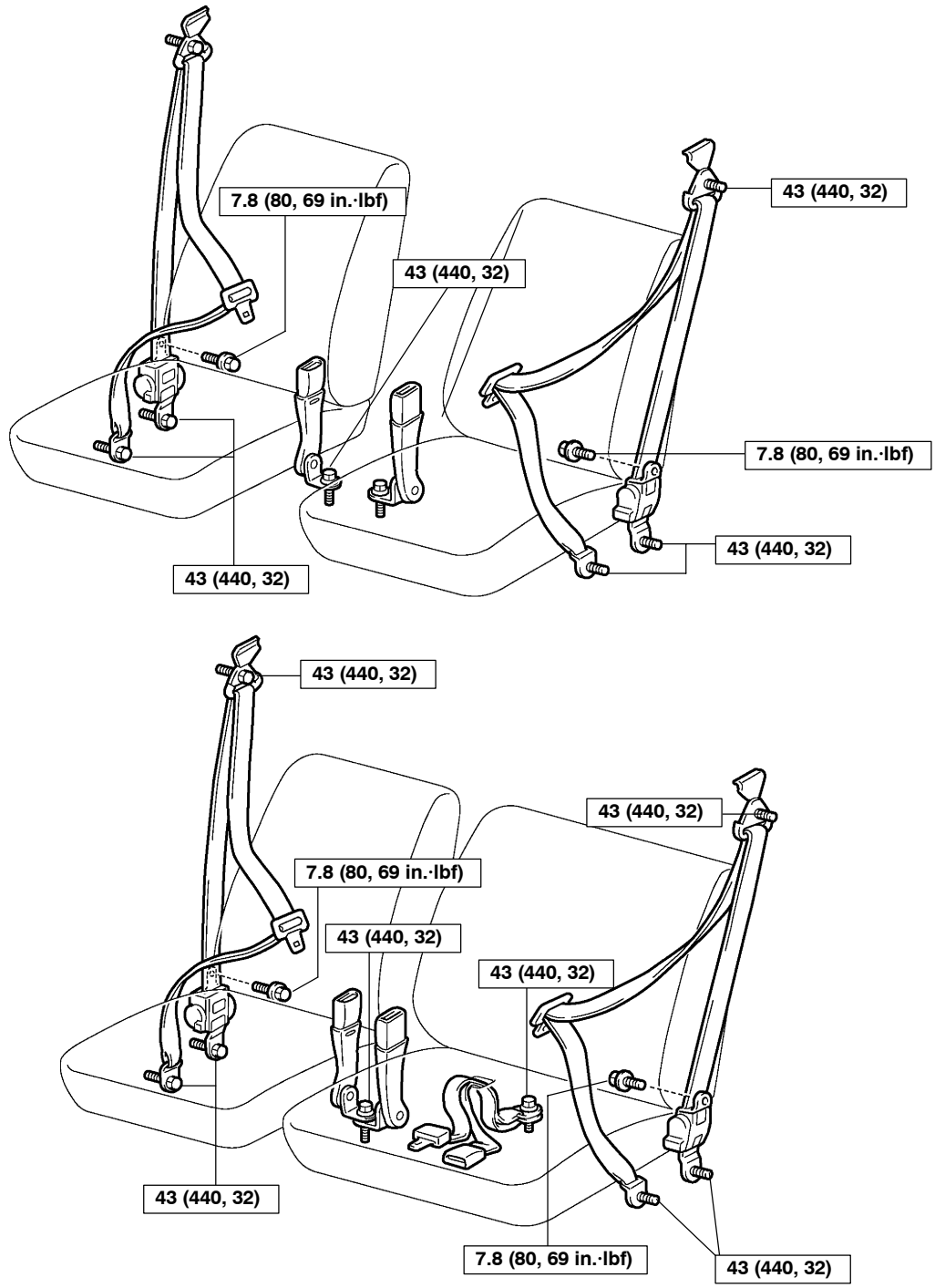

T

H12535

Rear seat belt:

(ELR type)

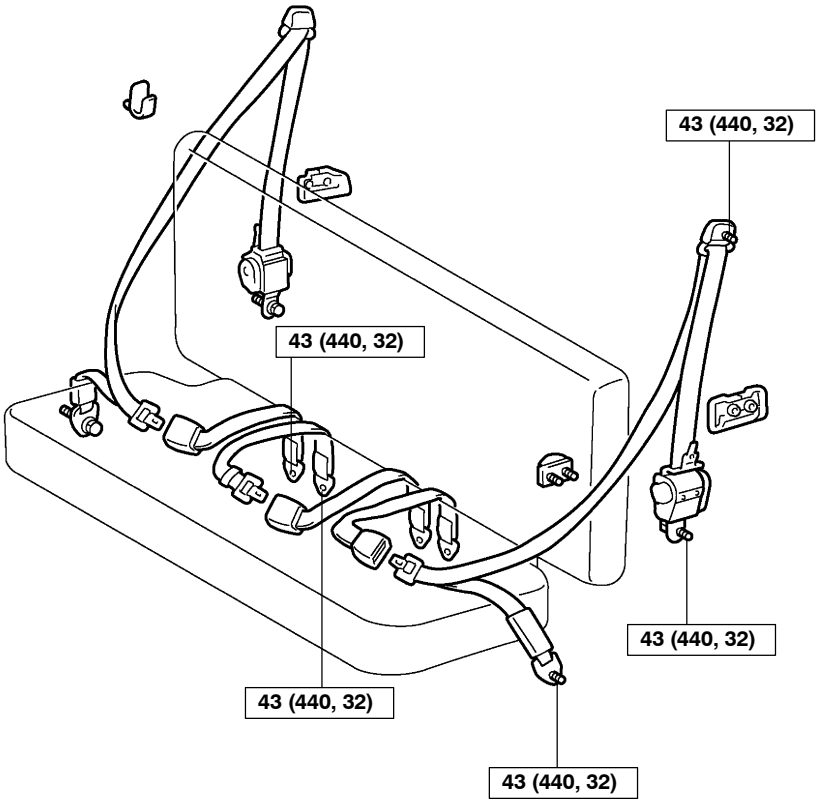

[Parallel seat]

(NR type)

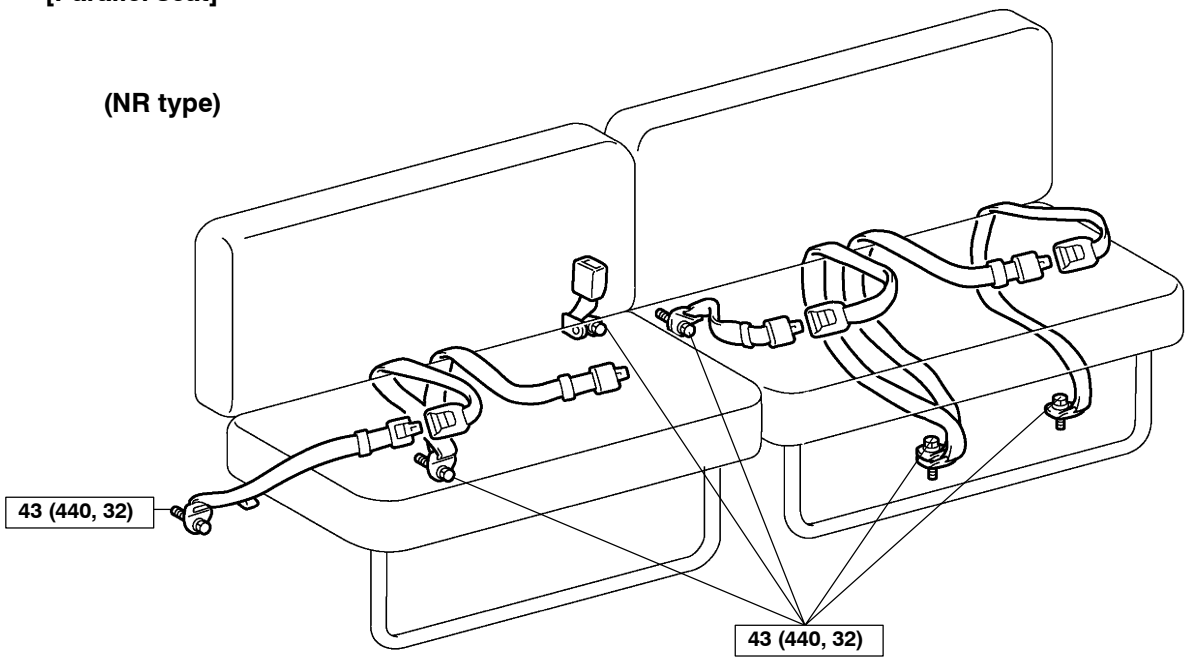

T

N·m (kgf·cm, ft·lbf) : Specified torque

H12517