FUEL TANK AND LINE

COMPONENTS

BO30F–01

Short type:

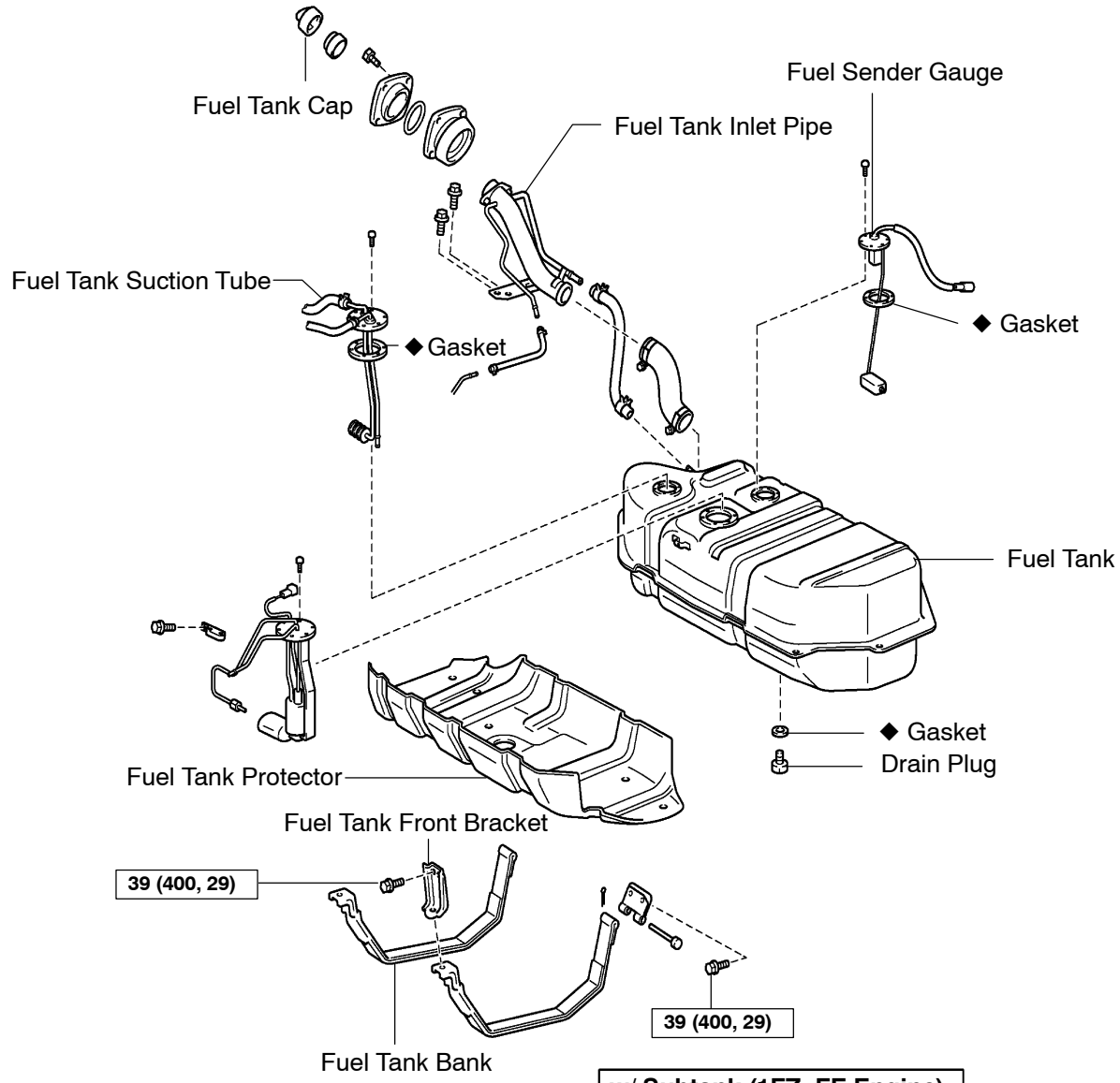

w/ Subtank (1FZ–FE Engine):

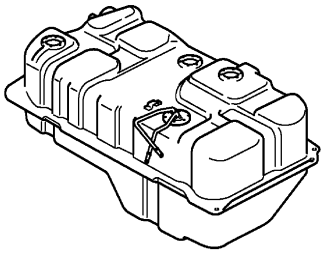

Europe:

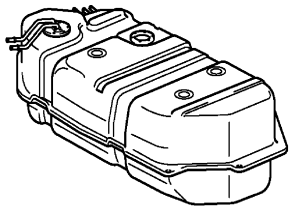

N·m (kgf·cm, ft·lbf) : Specified torque

◆ Non-reusable part

H12537

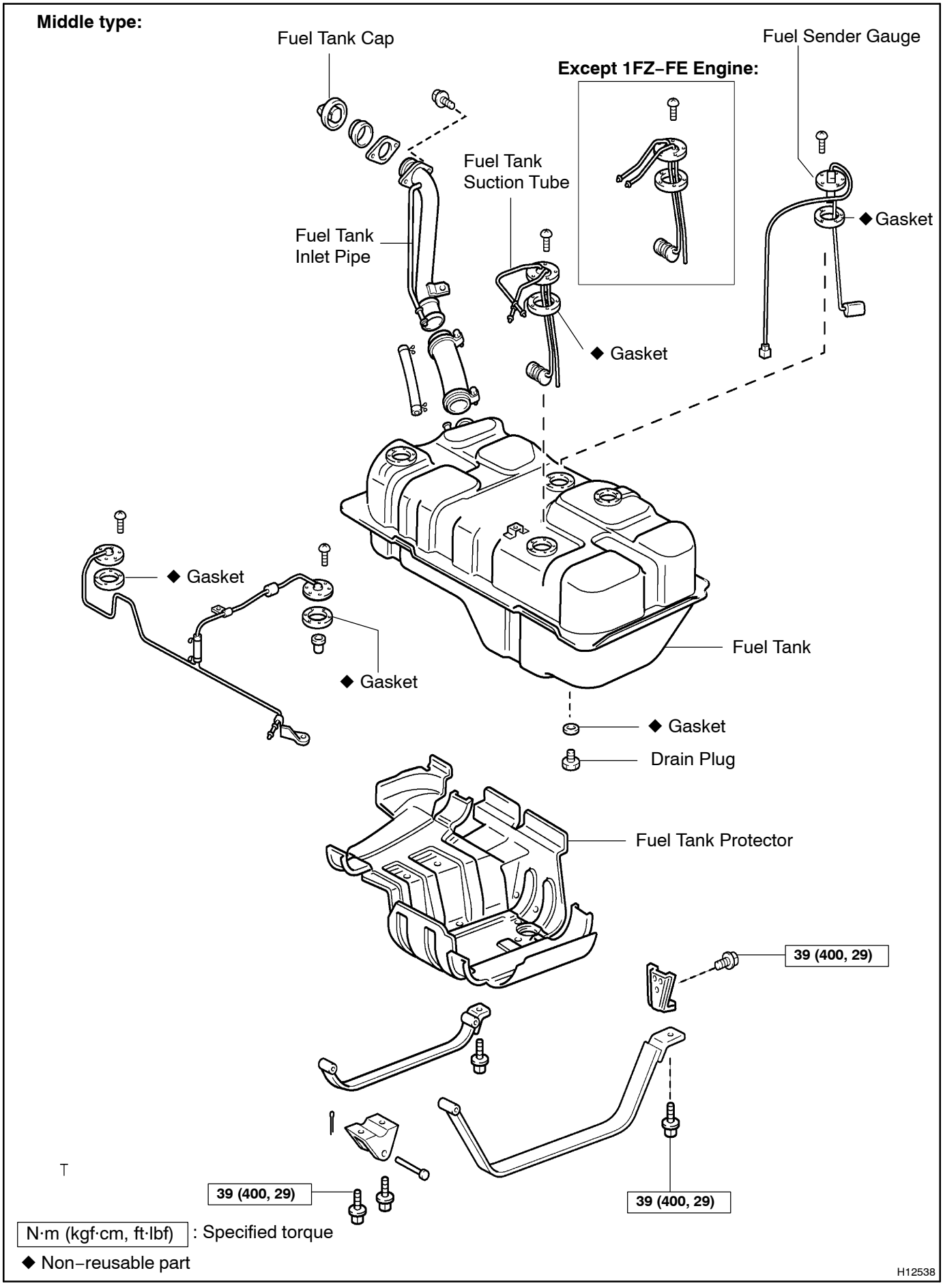
Middle type:
Fuel Tank Cap
Except 1FZ–FE Engine:
Fuel Sender Gauge
Fuel Tank Suction Tube
Fuel Tank Inlet Pipe
◆ Gasket
◆ Gasket
◆ Gasket
◆ Gasket
Fuel Tank
◆ Gasket
Drain Plug
Fuel Tank Protector
39 (400, 29)
39 (400, 29)
39 (400, 29)
N·m (kgf·cm, ft·lbf) : Specified torque
◆ Non–reusable part
H12538

Pick up type:

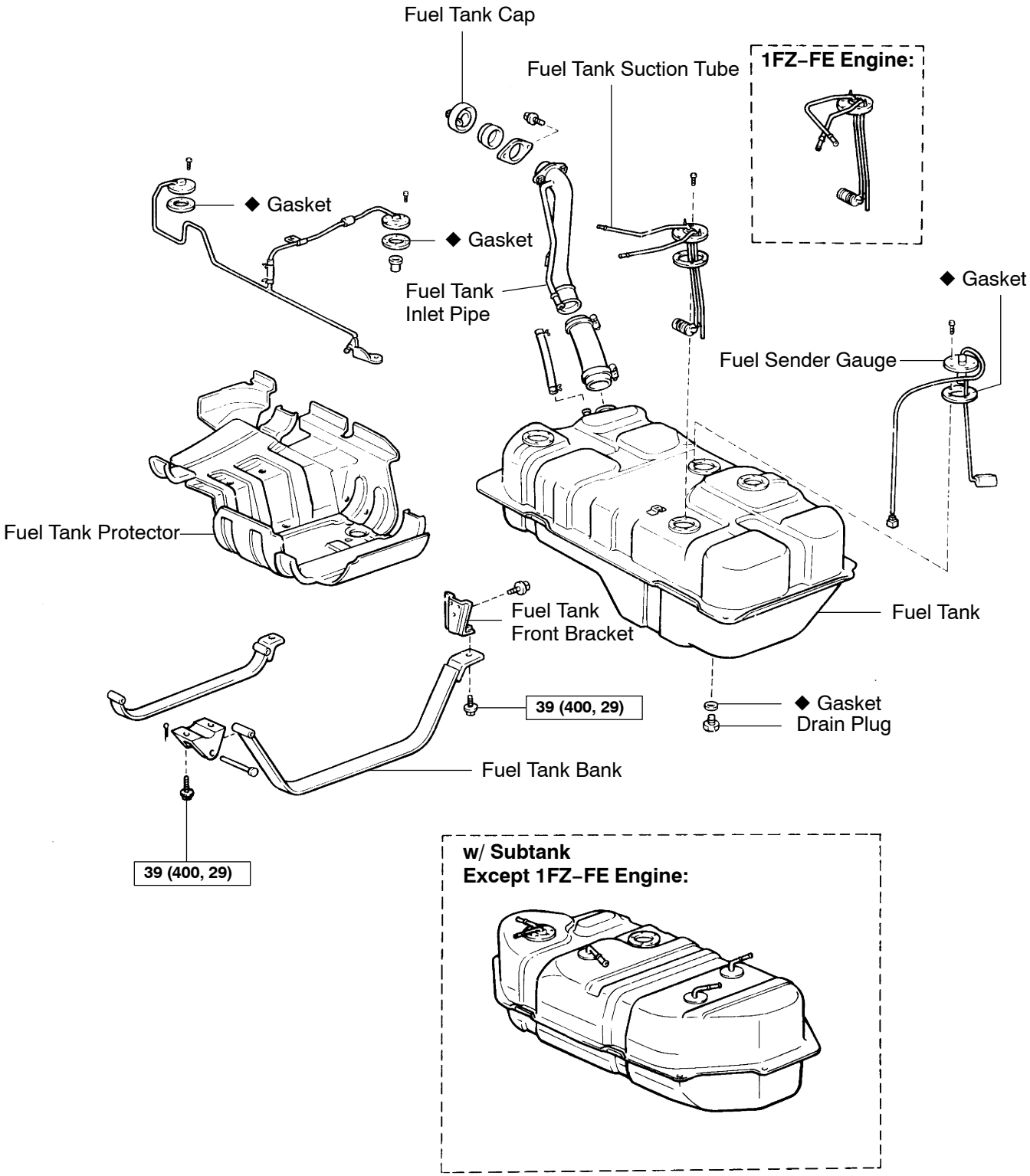

N·m (kgf·cm, ft·lbf) : Specified torque

◆ Non–reusable part

H12539

VAN, Pickup Subtank:

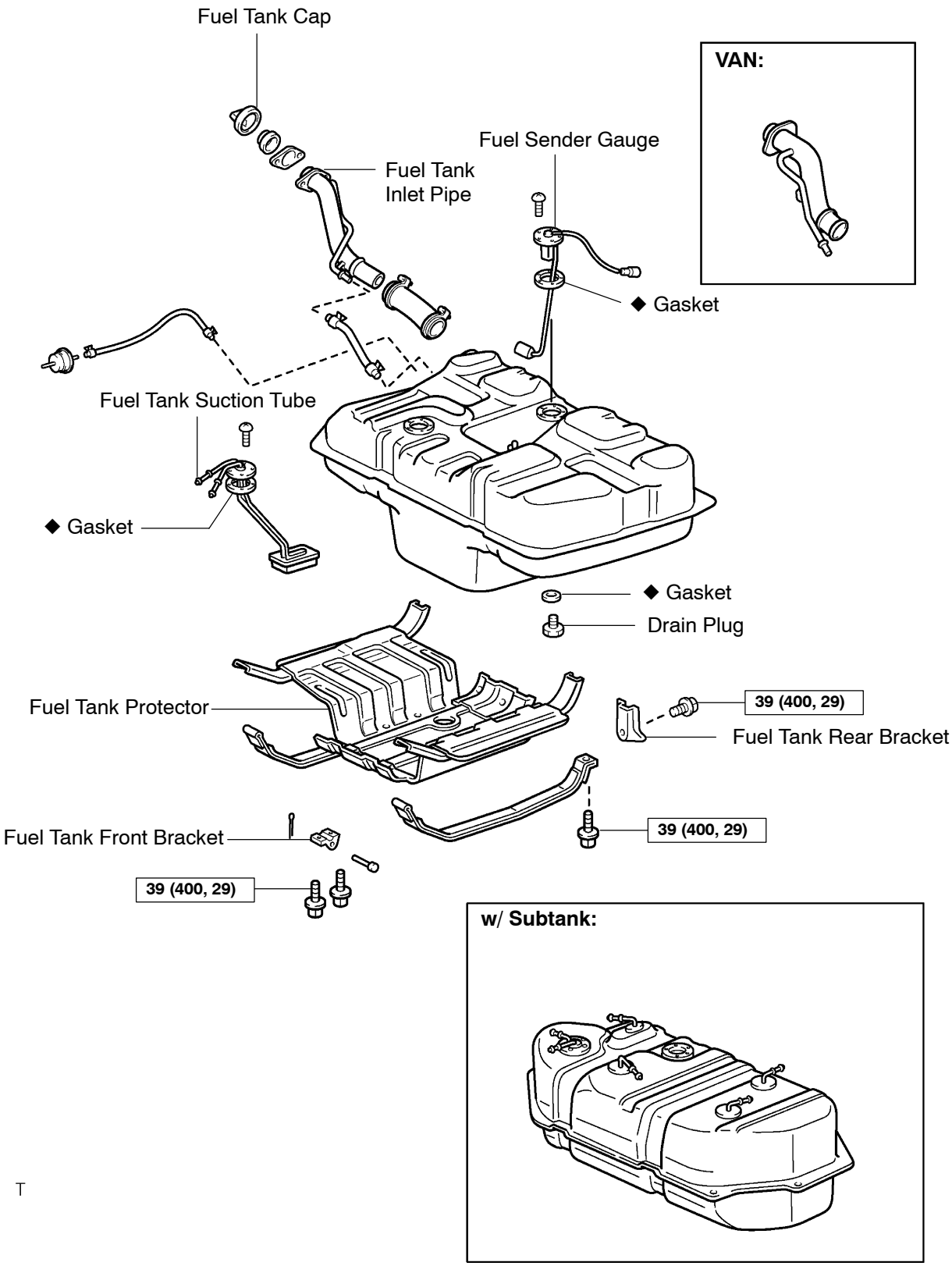

T

N·m (kgf·cm, ft·lbf) : Specified torque

◆ Non–reusable part

H12540

Super long:

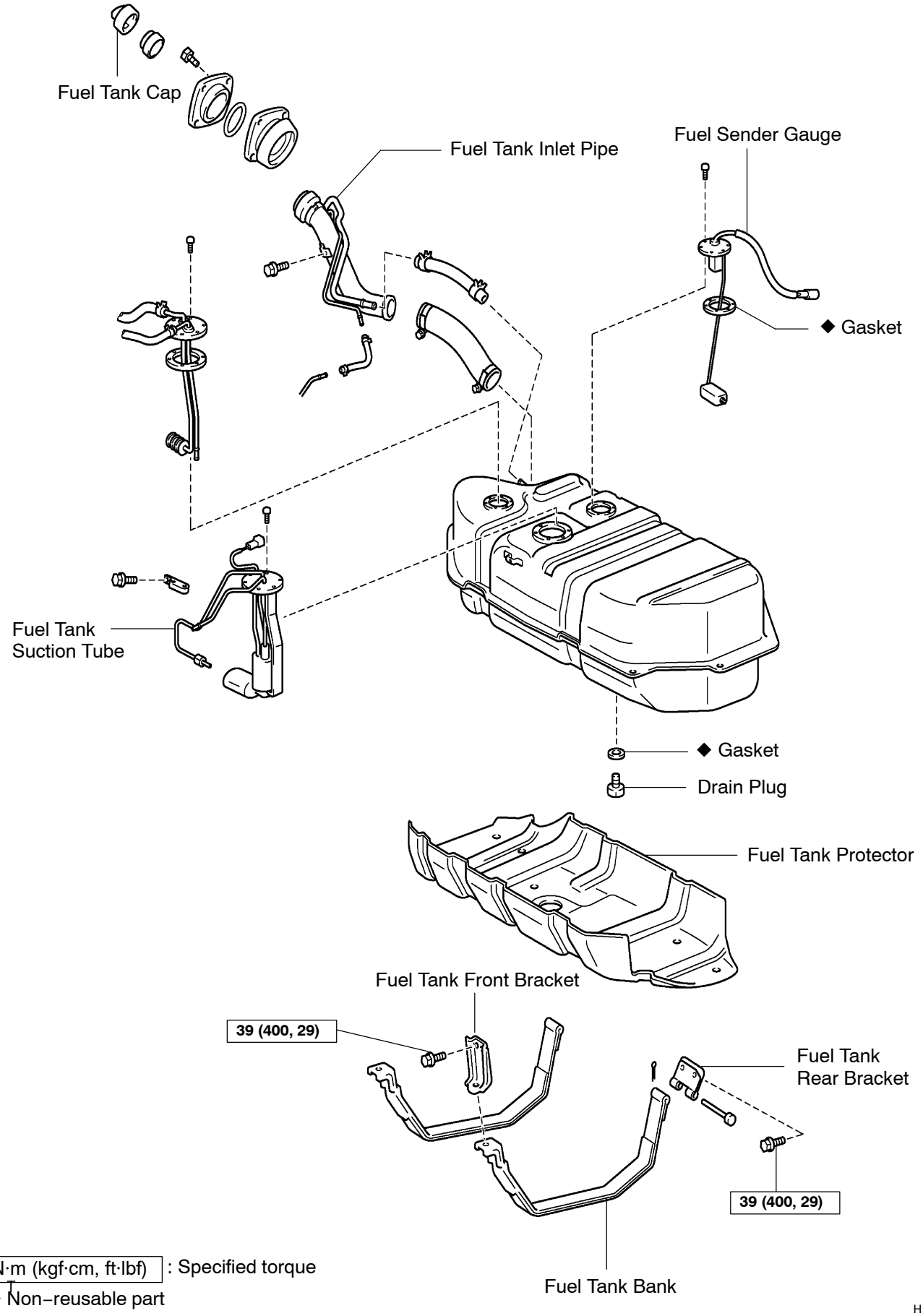
Fuel Tank Cap
Fuel Tank Inlet Pipe
Fuel Sender Gauge
◆ Gasket
Fuel Tank
Suction Tube
◆ Gasket
Drain Plug
Fuel Tank Protector
Fuel Tank Front Bracket
39 (400, 29)
Fuel Tank
Rear Bracket
39 (400, 29)
Fuel Tank Bank
N·m (kgf·cm, ft·lbf) : Specified torque
◆ Non–reusable part
H12541