IN0FT–01

VEHICLE LIFT AND SUPPORT LOCATIONS

w/o Rear stabilizer:

Front–Coil spring type
Rear– Leaf spring type (HZJ and FZJ series)

71 Series (short) and 74 Series (middle):

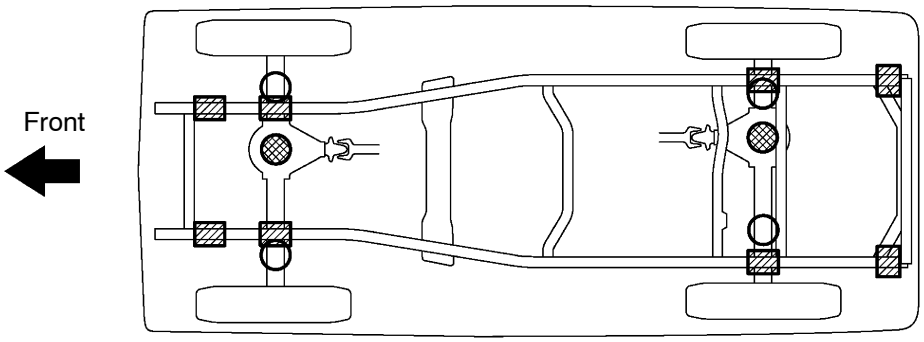

79 Series (Super Long):

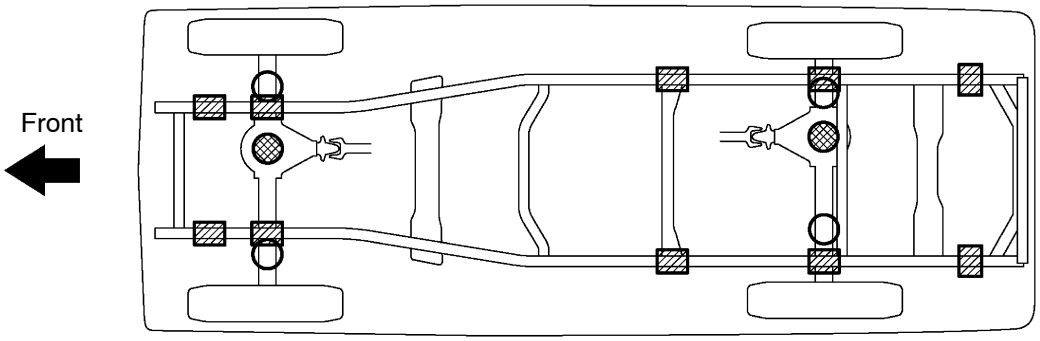

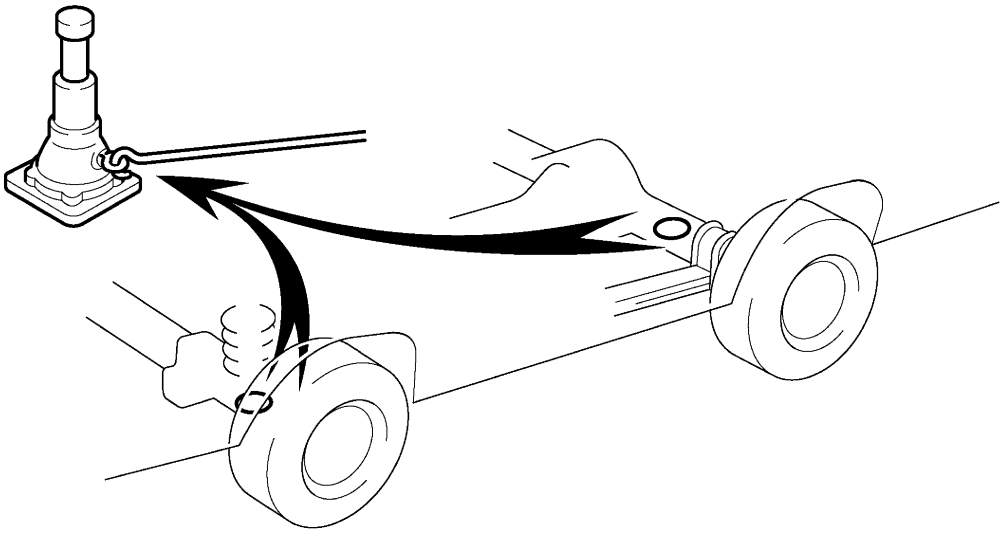

JACK POSITION

Front ····· Under the front differential
Rear ····· Under the rear differential

SUPPORT POSITION
Safety stand

SCREW TYPE JACK POSITION

N

H13329

w/ Rear stabilizer:
Front–Coil spring type
Rear– Leaf spring type (HZJ and FZJ series)

78 Series (Long) and 79 series (Super Long):

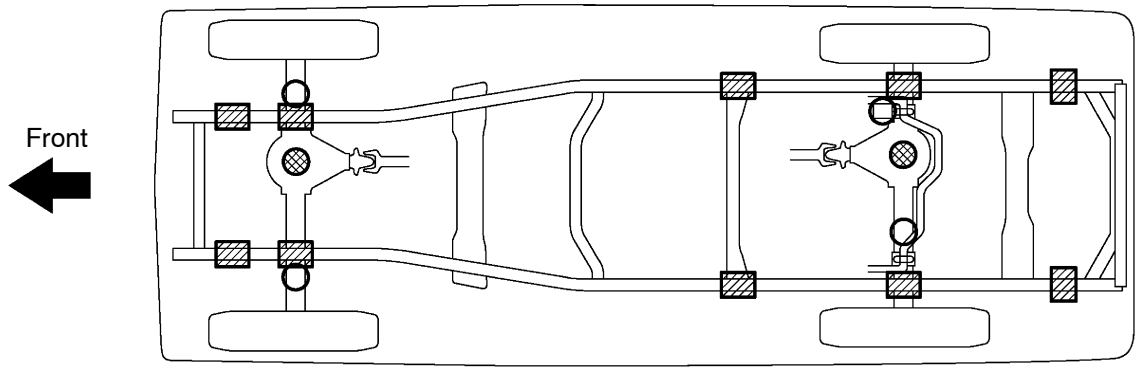

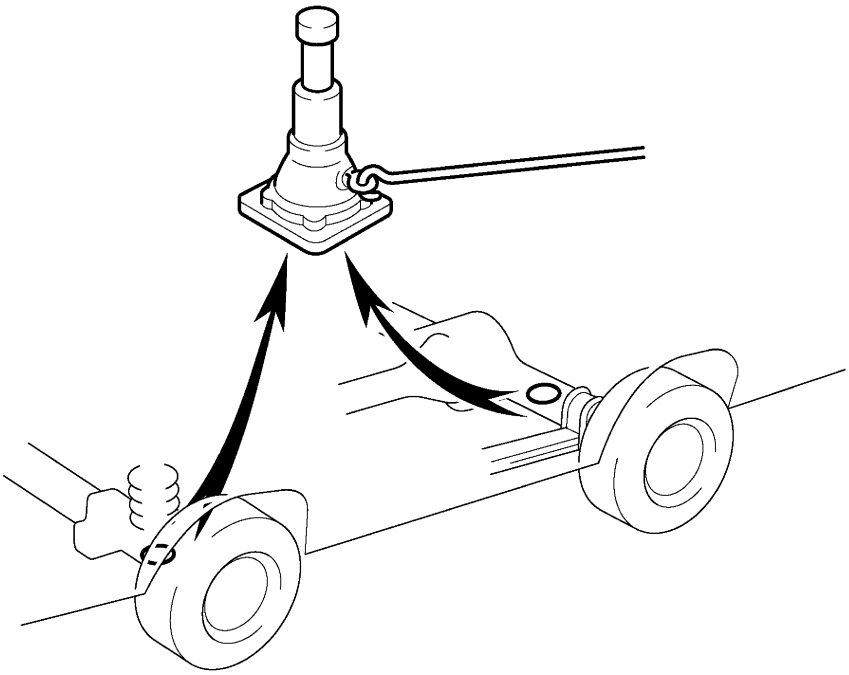

JACK POSITION

Front ····· Under the front differential
Rear ····· Under the rear differential

SUPPORT POSITION

Safety stand

SCREW TYPE JACK POSITION

N

B09268