MT09N–02

REPLACEMENT

IF NECESSARY, REPLACE COUNTER GEAR FRONT BEARING

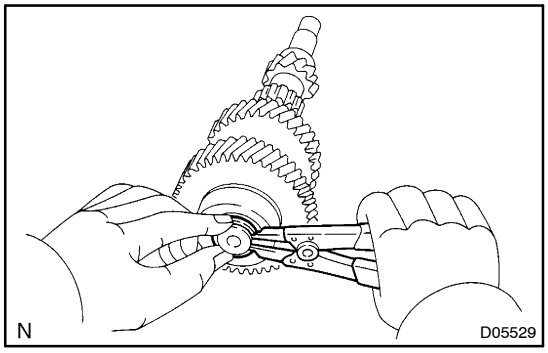

(a) Using a snap ring expander, remove the snap ring.

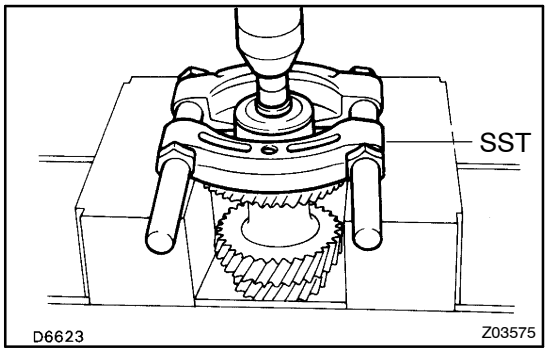

(b) Using SST and a press, remove the bearing.
SST 09950–00020

(c) Replace the side race.

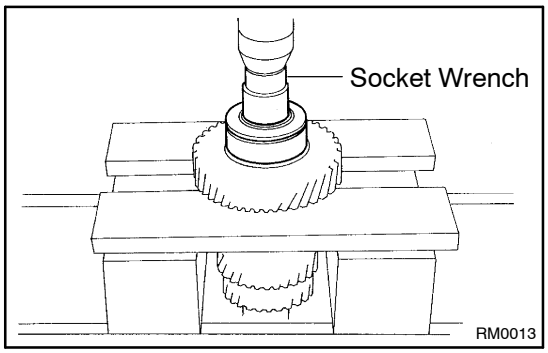

(d) Using a socket wrench and press, install a new bearing and side race.

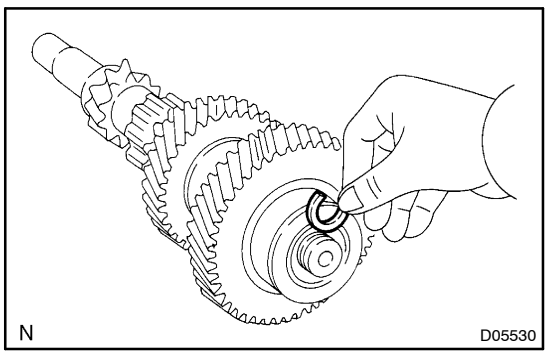

(e) Select a snap ring that allows the minimum axial play.

Mark	Thickness mm (in.)
A	2.05 – 2.10 (0.0807 – 0.0827)
B	2.10 – 2.15 (0.0827 – 0.0846)
C	2.15 – 2.20 (0.0846 – 0.0866)
D	2.20 – 2.25 (0.0866 – 0.0886)
E	2.25 – 2.30 (0.0886 – 0.0906)
F	2.30 – 2.35 (0.0906 – 0.0925)

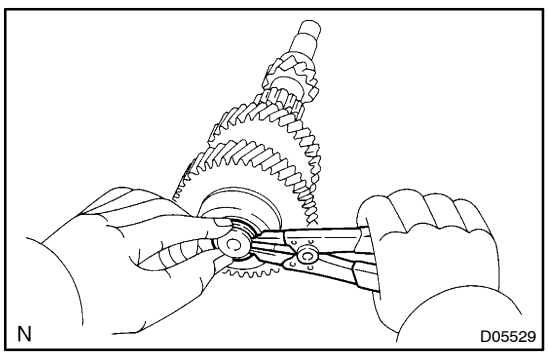

(f) Using a snap ring expander, install the snap ring.