FRONT AXLE HUB

COMPONENTS

SA1A4–03

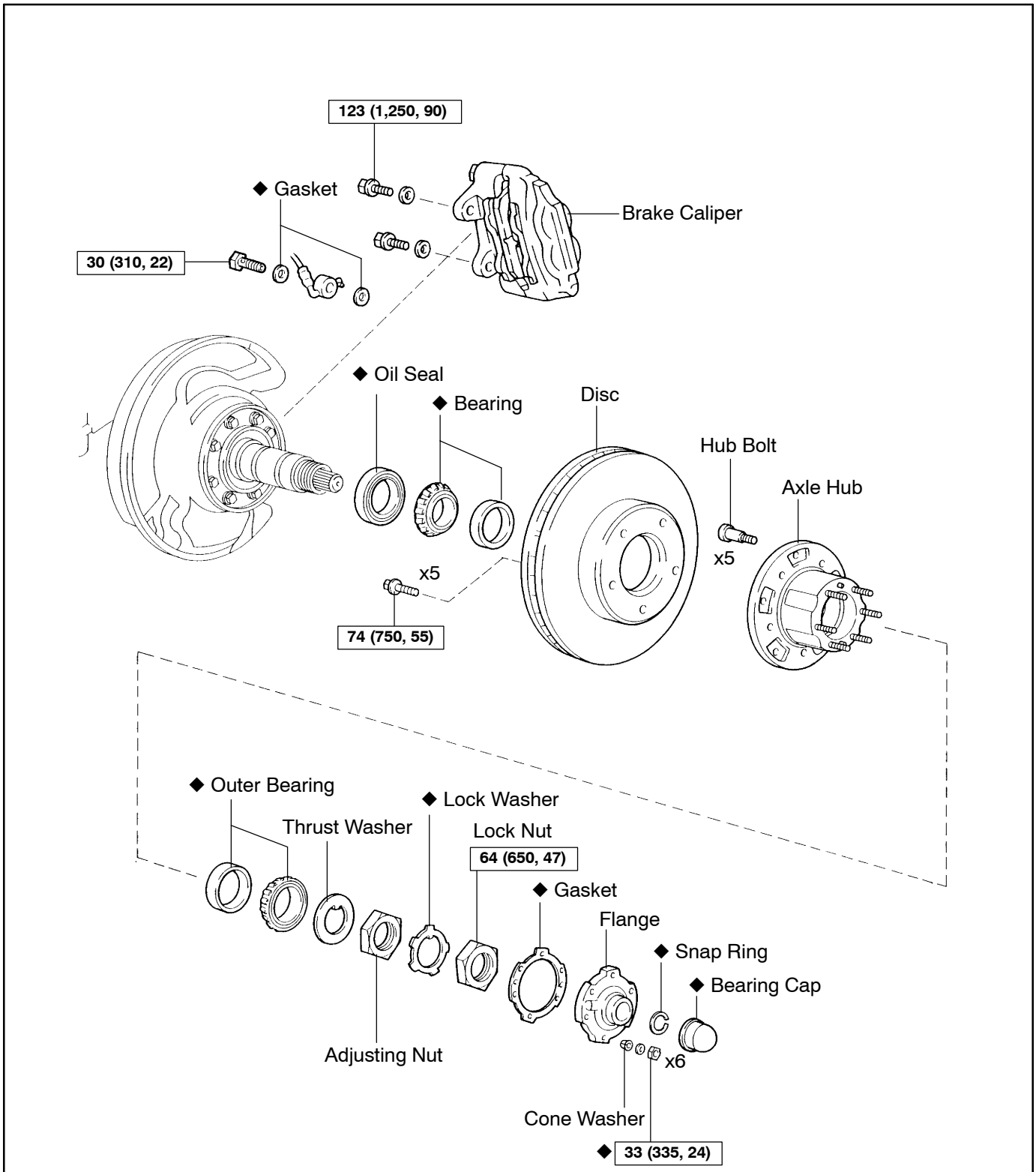

N·m (kgf·cm, ft·lbf) : Specified torque

◆ Non–reusable part

F05782