SA1A6–02

DISASSEMBLY

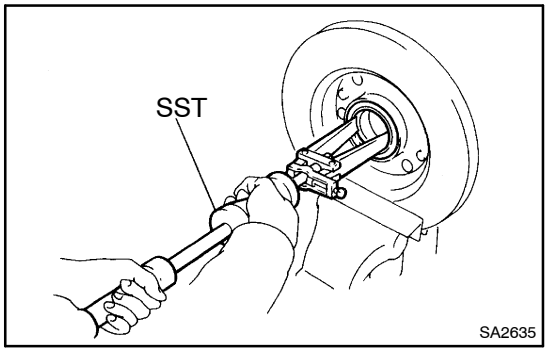

1. REMOVE OIL SEAL AND BEARING

(a) Using SST, remove the oil seal.
SST 09308–00010

(b) Remove the bearing from the axle hub.

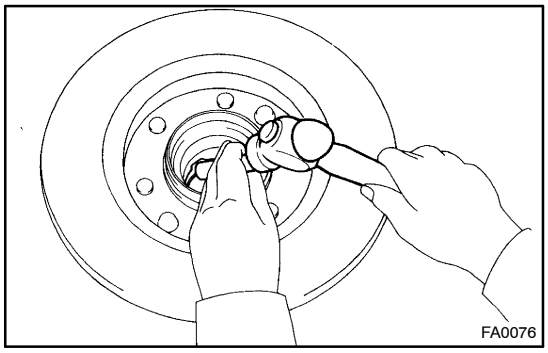

2. REMOVE BEARING OUTER RACES

Using a brass bar and hammer, remove the 2 bearing outer races.

3. INSPECT BEARINGS

Clean the 2 bearings and outer races and inspect them for wear or damage.

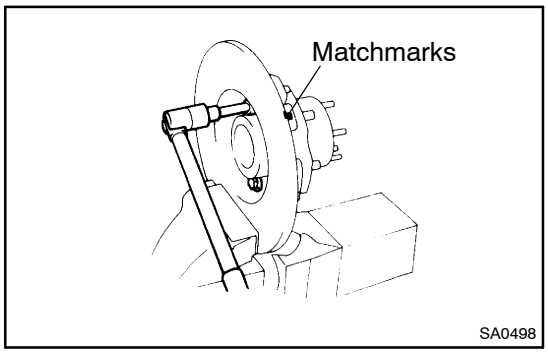

4. REMOVE DISC

(a) Place matchmarks on the axle hub and disc.

(b) Remove the 5 bolts and disc from the axle hub.