SA1A7–02

REASSEMBLY

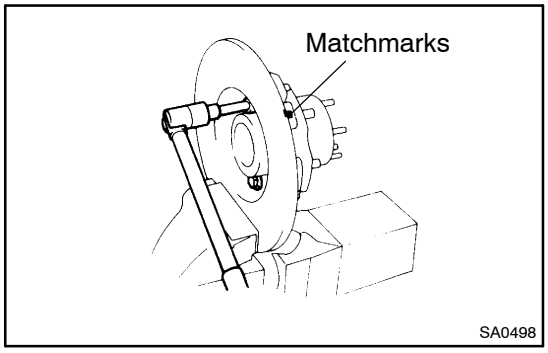

1. INSTALL DISC

(a) Align the matchmarks on the axle hub and disc.

(b) Install the 5 bolts to the axle hub.

Torque: 74 N·m (750 kgf·cm, 55 ft·lbf)

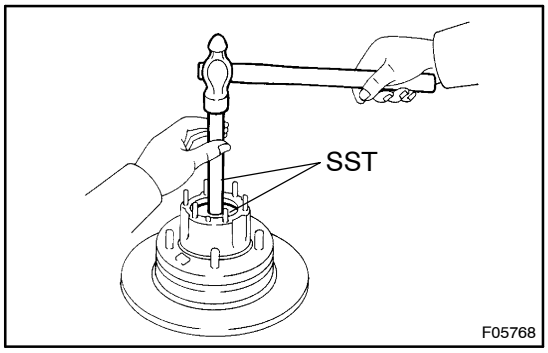

2. INSTALL BEARING OUTER RACES

(a) Using SST and a hammer, carefully install a new outside bearing outer race.

SST 09950–60020 (09951–00720),
09950–70010 (09951–07150)

(b) Using SST and a hammer, carefully install a new inside bearing outer race.

SST 09950–60020 (09951–00810),
09950–70010 (09951–07150)

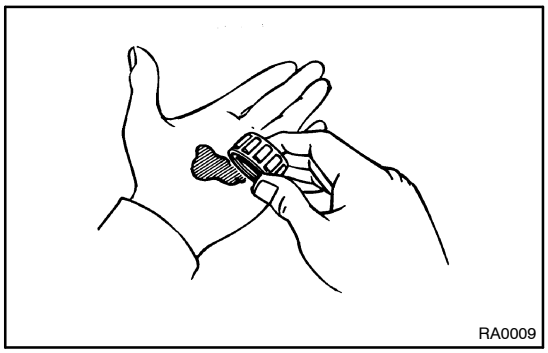

3. PACK BEARING WITH MP GREASE

(a) Place MP grease in the palm of your hand.

(b) Pack grease into the bearing, continuing until the grease oozes out from the other side.

(c) Do the same around the bearing circumference.

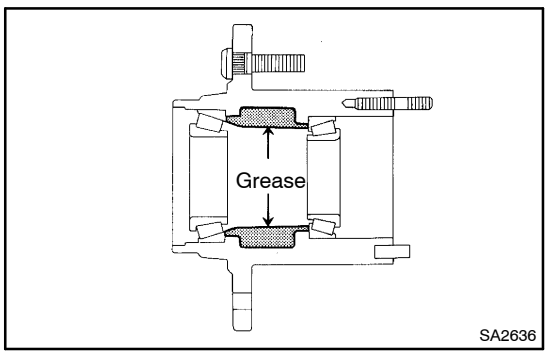

4. COAT INSIDE OF AXLE HUB WITH MP GREASE

5. INSTALL INNER BEARING AND OIL SEAL

(a) Place the inner bearing into the axle hub.

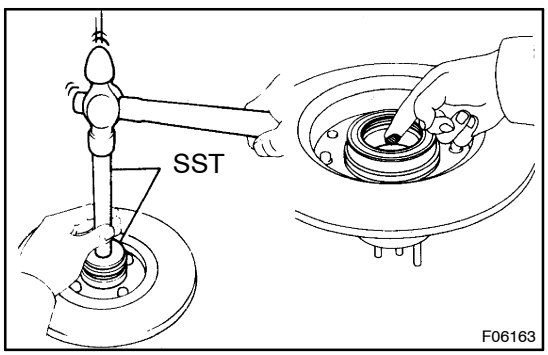

(b) Using SST, install a new oil seal into the hub.

SST 09950–60020 (09951–00910),
09950–70010 (09951–07150)

(c) Coat the oil seal lip with MP grease.