SA1QG–01

INSTALLATION

1. INSTALL AXLE HUB WITH DISC TO SPINDLE

(a) Place the axle hub with disc to the spindle.
(b) Install the outer bearing.
(c) Install the thrust washer.

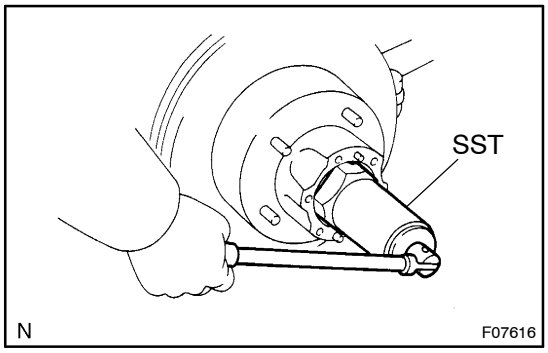

2. w/ Dual mode automatic locking hub:
ADJUST PRELOAD

(a) Install the adjusting nut and tighten it using SST.
SST 09607–60020
Torque: 59 N·m (600 kgf·cm, 43 ft·lbf)
(b) Turn the hub right and left 2 or 3 times.
(c) Loosen the nut until it can be turned by hand.
(d) Using SST, retighten the adjusting nut.
SST 09607–60020
Torque: 49 N·m (500 kgf·cm, 36 ft·lbf)
(e) Tighten the adjusting nut in the tightening direction so that the grooves of the adjusting nut are aligned with on the key grooves before and after spindle.
Torque: 49 – 79 N·m (500 – 800 kgf·cm, 36 – 58 ft·lbf)

NOTICE:
Check that the bearing has no play.

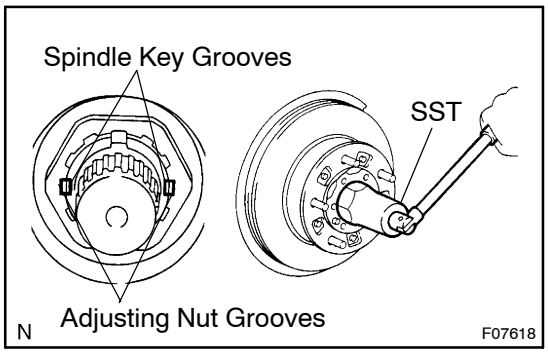

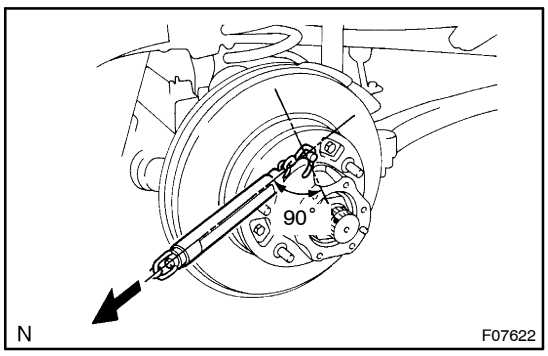

(f) Using a spring tension gauge, measure the preload.
Preload (at starting):
26 – 52 N (2.7 – 5.3 kgf, 6.0 – 11.7 lbf)

HINT:
Make sure to check preload in the direction of rotation.
If the preload is not within the specified value, adjust it again with the adjusting nut.

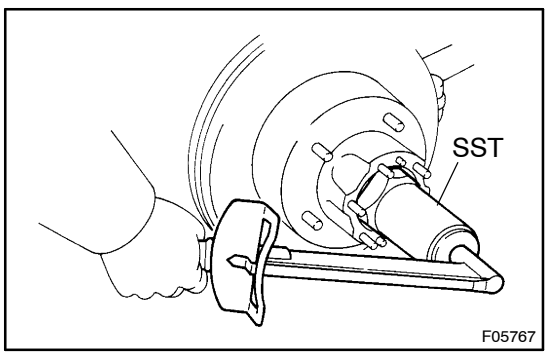

3. Others:
ADJUST PRELOAD

(a) Using SST, torque the adjusting nut.
SST 09607–60020
Torque: 59 N·m (600 kgf·cm, 43 ft·lbf)
(b) Turn the hub right and left 2 or 3 times.
(c) Loosen the nut until it can be turned by hand.
(d) Using SST, retighten the adjusting nut.
SST 09607–60020
Torque: 5.4 N·m (55 kgf·cm, 48 ft·lbf)

NOTICE:
Check that the bearing has no play.

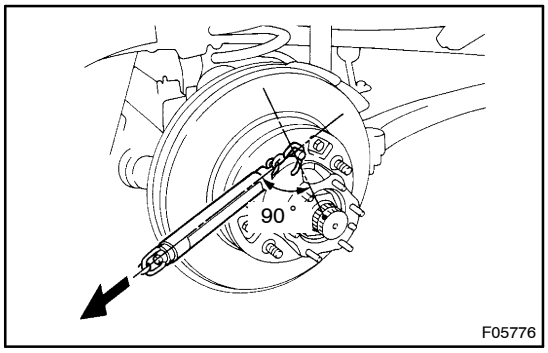

(e) Using a spring tension gauge, measure the preload.
Preload (at starting):
26 – 52 N (2.7 – 5.3 kgf, 6.0 – 11.7 lbf)

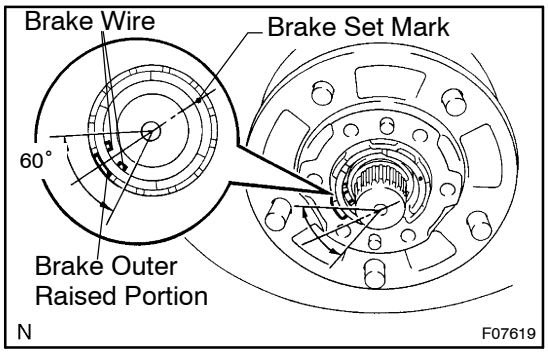

4. w/ Dual mode automatic locking hub:
INSTALL BRAKE SET, SPINDLE WASHER AND SNAP RING TO SPINDLE

(a) Check that the brake wire is within the range of 60° of the brake outer raised portion on the opposite side to the brake set mark.

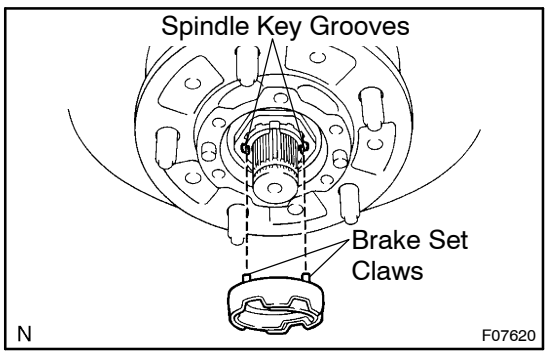

(b) Align the claws of the brake set with the key grooves of the spindle and assemble the brake set.
(c) Install the spindle washer and using a snap ring expander, install a new snap ring.
(d) Install the bolt to the axle shaft.

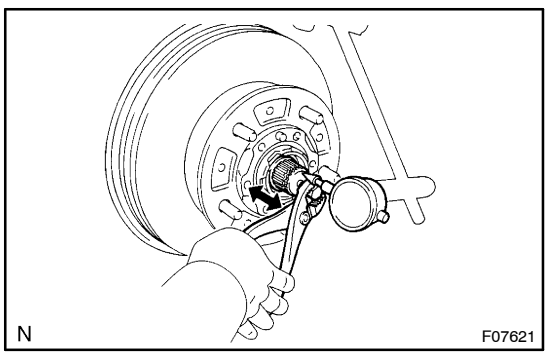

(e) Using a dial indicator, check the backlash near the center of the axle shaft, while pulling the bolt with pliers.
Maximum: 0.2 mm (0.008 in.)

If the backlash is not within the specified value, replace the snap ring.

Snap ring thickness:

1.80 mm (0.0709 in.)	2.40 mm (0.0945 in.)
2.00 mm (0.0787 in.)	2.60 mm (0.1024 in.)
2.20 mm (0.0866 in.)	2.80 mm (0.1102 in.)

(f) Remove the bolt from the axle shaft.

5. Others:
INSTALL LOCK WASHER AND LOCK NUT

(a) Install a new lock washer and lock nut.

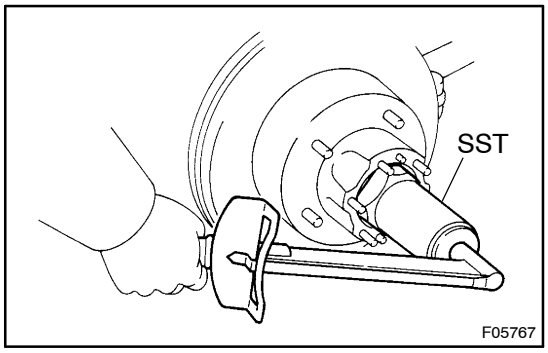

(b) Using SST, torque the lock nut.
SST 09607–60020
Torque: 64 N·m (650 kgf·cm, 47 ft·lbf)

(c) Check that axle hub turns smoothly and that the bearing has no play.

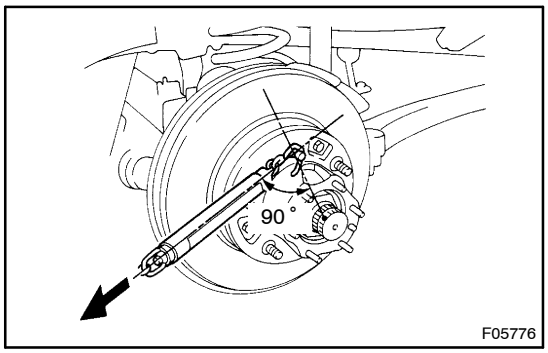

(d) Using a spring tension gauge, check the preload.
Preload (at starting):
26 – 52 N (2.7 – 5.3 kgf, 6.0 – 11.7 lbf)

If it is not within the specification, adjust it with the adjusting nut after removing the lock washer and lock nut.

(e) Secure the lock nut by bending one of the lock washer teeth inward and the other lock washer teeth outward.

6. w/ Dual mode automatic locking hub:
INSTALL DUAL MODE AUTOMATIC LOCKING HUB (See page SA–19)

7. w/ Free wheel hub:
INSTALL FREE WHEEL HUB (See page SA–16)

8. Others:
INSTALL FLANGE

(a) Place a new gasket in position on the axle hub.

(b) Apply MP grease to the inner flange spline.

(c) Install the flange to the axle hub.

(d) Install the 6 cone washers, plate washers and new nuts.
Torque: 33 N·m (335 kgf·cm, 24 ft·lbf)

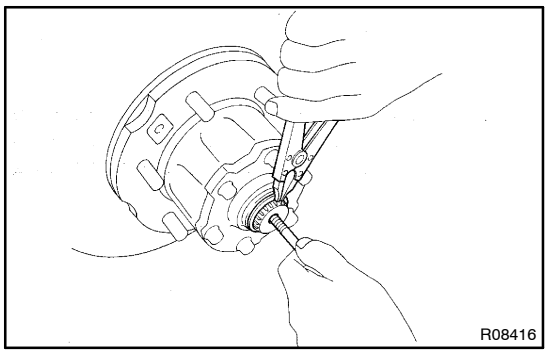

(e) Install the bolt in the axle shaft and pull it out.

(f) Using a snap ring expander, install a new snap ring.

(g) Remove the bolt.

(h) Coat inside of the new cap with MP grease.

(i) Install the cap to the flange.

9. INSTALL BRAKE CALIPER

(a) Install the brake caliper, 2 bolts and washers.
Torque: 123 N·m (1,250 kgf·cm, 90 ft·lbf)

(b) Connect the flexible hose and install 2 new gaskets and bolt.
Torque: 30 N·m (310 kgf·cm, 22 ft·lbf)

10. INSTALL FRONT WHEEL
Torque:
Steel wheels: 209 N·m (2,131 kgf·cm, 154 ft·lbf)
Aluminum wheels: 131 N·m (1,336 kgf·cm, 97 ft·lbf)

11. BLEED BRAKE LINE (See Pub. No. RM183E on page BR–7)