SA1AC–02

INSTALLATION

1. INSTALL FREE WHEEL HUB BODY

(a) Place a new gasket in position on the axle hub.

(b) Install the body with 6 cone washers, washers and new nuts.

Torque: 33 N·m (335 kgf·cm, 24 ft·lbf)

(c) Select the snap ring which ensures the clearance between the tip of the body and the snap ring is less than 0.2 mm (0.008 in.).

Snap ring thickness

1.8 mm (0.0709 in.)	2.4 mm (0.0945 in.)
2.0 mm (0.0787 in.)	2.6 mm (0.1024 in.)
2.2 mm (0.0866 in.)	2.8 mm (0.1102 in.)

(d) Using a snap ring expander, install a new snap ring.

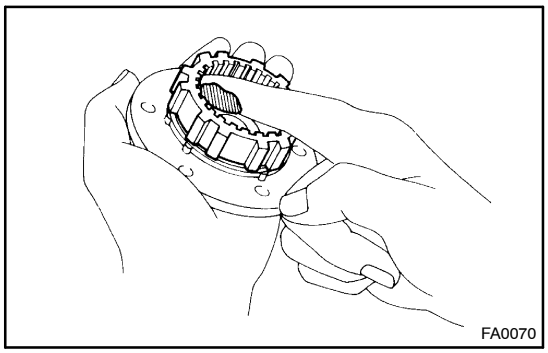
FA0070

2. INSTALL FREE WHEEL HUB COVER

(a) Apply MP grease to inner hub splines.

(b) Set the control handle to FREE.

(c) Place a new gasket in position on the body.

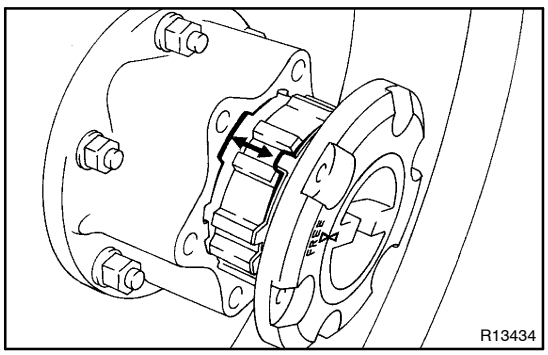

R13434

(d) Install the cover to the body with the tabs of the pawl aligned with the non–toothed portions of the body.

(e) Install the 6 bolts.

Torque: 10 N·m (100 kgf·cm, 7 ft·lbf)