SA1IL–02

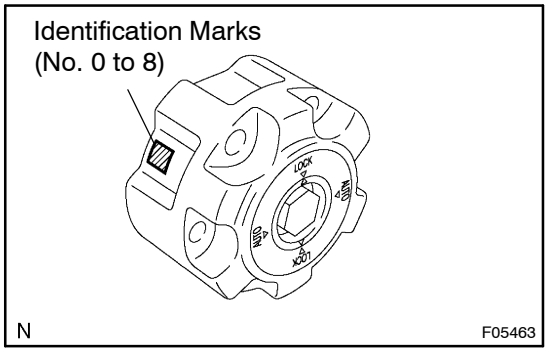

INSTALLATION

HINT:

- Replace the rocking hub assembly for right and left at the same time, while matching the identification marks (No. 0 to 8) on both rocking hubs.
- After assembling the dual automatic rocking hub to the axle hub, when the knob of the rocking hub is turned to "AUTO", the rocking hub might be either locked or free. Therefore, it is necessary to turn the axle hub to free. Also it is necessary to move the vehicle back and forth with 2WD to turn the rocking hub free.

1. INSTALL BRAKE SET, SPINDLE WASHER AND NEW SNAP RING TO SPINDLE **(See page SA–9)**

2. INSTALL NEW GASKET

3. CHECK KNOB OF DUAL MODE AUTOMATIC LOCKING HUB IN "LOCK" POSITION

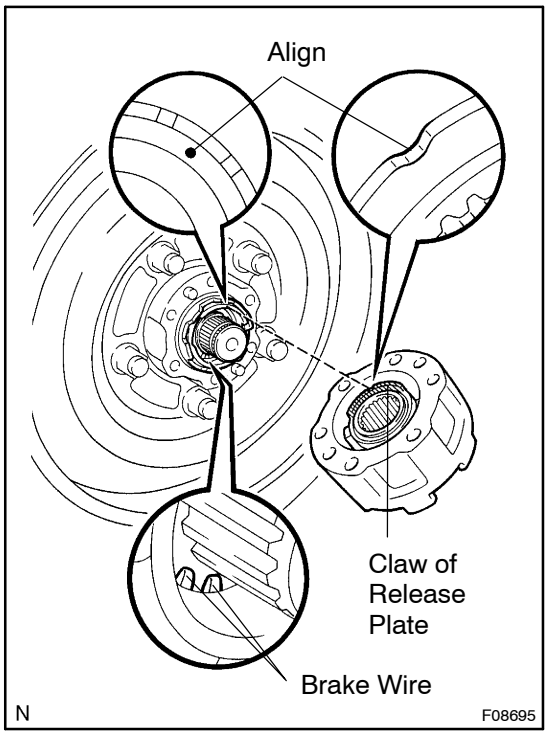

4. INSTALL DUAL MODE AUTOMATIC LOCKING HUB

(a) Align the marks on the brake set and notch on the locking hub.

HINT:

Check that the brake wire of the brake set does not touch the claw on the release plate of the rocking hub.

(b) Insert the gear drive of the locking hub into the axle shaft and push the locking hub into the axle hub.

HINT:

While holding the rocking hub to the axle hub, ensure that there is no gap between the axle hub and rocking hub.

If there is a gap, the brake wire and claw of the release plate might touch. Check and repair it and confirm that there is no gap.

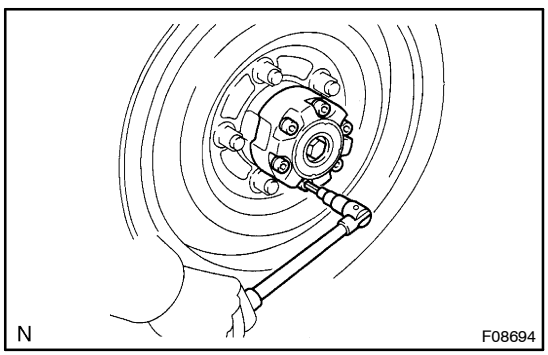

(c) Using a 8 mm hexagon wrench, install new 6 hexagon bolts.

Torque: 55 N·m (559 kgf·cm, 40 ft·lbf)