SA1AF–02

REMOVAL

1. REMOVE FRONT AXLE HUB (See page SA–6)

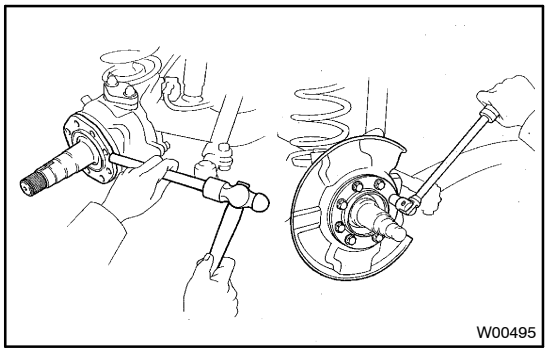

2. REMOVE DUST SEAT AND DUST COVER

Remove the 8 bolts, dust seal, dust cover and gasket.

3. REMOVE KNUCKLE SPINDLE

(a) Using a brass bar and hammer, tap the knuckle spindle of the steering knuckle.

(b) Remove the knuckle spindle and gasket.

4. REMOVE AXLE SHAFT

Position one flat part of the outer shaft upward and remove the axle shaft.

5. DISCONNECT TIE ROD FROM KNUCKLE ARM

(a) Remove the cotter pin and nut.

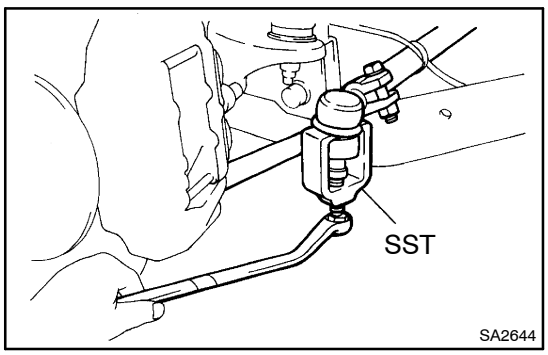

(b) Using SST, disconnect the tie rod from the knuckle arm.
SST 09611–22012

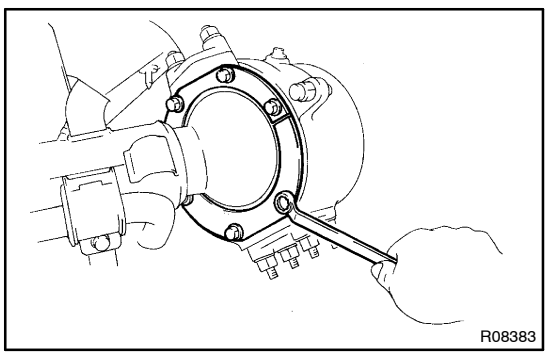

6. REMOVE OIL SEAL END RETAINER

Remove the 6 bolts from the oil seal end retainer.

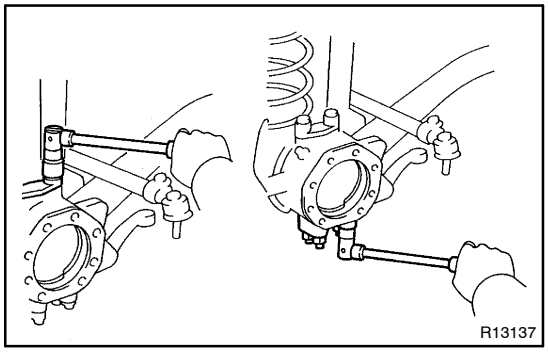

7. REMOVE KNUCKLE ARM AND BEARING CAP

(a) Remove the 2 bolts from the bearing cap.

(b) Remove the 4 nuts from the knuckle arm.

(c) Using a brass bar and hammer, tap on the 4 bolts heads and remove the 4 cone washers.

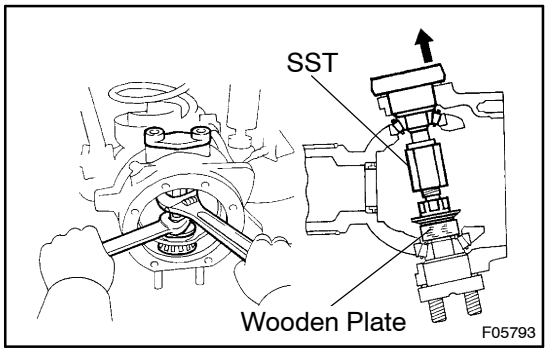

(d) Using SST and wooden plate, remove the bearing cap and shim from the steering knuckle.

SST 09606–60020

HINT:

- Use the SST without a collar.
- In some cases, to satisfy the standard value of preload, more than one shims are used.

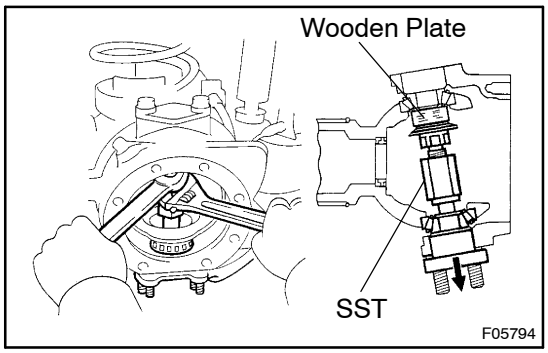

(e) Using SST and wooden plate, remove the knuckle arm from the steering knuckle.

SST 09606–60020

HINT:

- Use the SST without a collar.
- In some cases, to satisfy the standard value of preload, more than one shims are used.

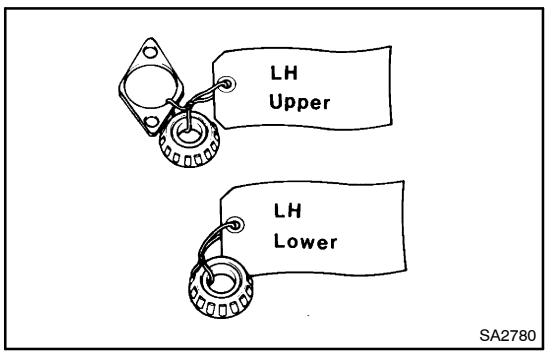

8. REMOVE STEERING KNUCKLE AND BEARING

HINT:

Mark the removed adjusting shim and bearings so as to enable reassembling them to their proper positions.

9. REMOVE OIL SEAL SET

Remove the steel ring, rubber seal and felt dust seal.

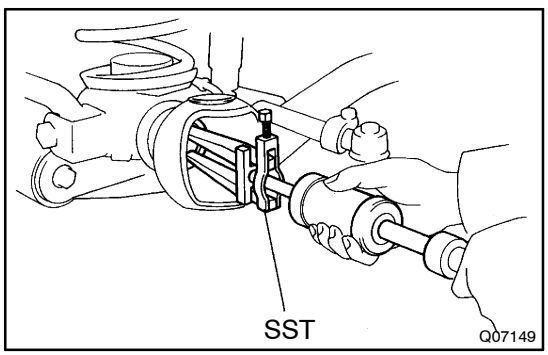

10. REMOVE OIL SEAL TO AXLE HOUSING

Using SST, remove the oil seal.

SST 09308–00010